Special Outdoor Issue

Simple Storage Solution for Garage or Shop

Woodsmith®

www.Woodsmith.com

Vol. 24 / No. 142

Patio Table

Discover the Straight Story on Making a Round Top

PLUS: The Top Choice for an Outdoor Finish

Bonus: Easy-to-Build Weekend Project

A Publication of August Home Publishing

Woodsmith

No. 142 August, 2002

Publisher Donald B. Peschke
Editor Terry J. Strohman
Senior Editor Jon Garbison
Assistant Editor Brian McCallum
Art Director Todd Lambirth
Senior Illustrators David Kreyling, Dirk Ver Steeg, Harlan V. Clark
Graphic Intern Nathan Robertson

CREATIVE RESOURCES
Creative Director: Ted Kralicek • *Project Developer:* Ken Munkel • *Sr. Project Designers:* Kent Welsh, Ryan Mimick • *Project Designer:* Chris Fitch • *Shop Craftsmen:* Steve Curtis, Steve Johnson • *Sr. Photographer:* Crayola England

SPECIAL PUBLICATIONS
Corp. VP: Douglas L. Hicks • *Art Director:* Douglas A. Flint • *Senior Graphic Designer:* Chris Glowacki • *Assoc. Editor:* Craig Ruegsegger• *Assistant Editor:* Joel A. Hess • *Graphic Designers:* Vu Nguyen, Jonathan Eike • *Editorial Intern:* Cindy Thurmond

CIRCULATION
Subscriber Services Director: Sandy Baum • *New Business Circ. Mgr.:* Wayde Klingbeil • *Multi-media Promotions Manager:* Rick Junkins • *Promotions Analyst:* Patrick Walsh • *Renewal Mgr.:* Paige Rogers • *Billing & Collections Manager:* Rebecca Cunningham • *Circ. Marketing Analyst:* Kris Schlemmer • *Assoc. Circ. Marketing Analyst:* Paula M. DeMatteis • *Sr. Graphic Designers:* Mark Hayes, Robin Friend

CORPORATE SERVICES
VP of Finance: Mary R. Scheve • *Controller:* Robin K. Hutchinson • *Sr. Account.:* Laura J. Thomas • *Accts. Payable:* Mary J. Schultz • *Accts. Receivable:* Margo Petrus • *Production Dir.:* George Chmielarz • *Electronic Publishing Director:* Douglas M. Lidster • *System Administrator:* Cris Schwanebeck • *PC Maint. Tech.:* Robert D. Cook• *Pre-press Image Specialists:* Troy A. Clark, Minniette Johnson • *New Media Mgr.:* Gordon C. Gaippe • *Web Site Art Dir.:* Gene Pedersen • *Web Server Admin.:* Carol Schoeppler • *Web Content Mgrs.:* David Briggs, Sue M. Moe • *Web Designer:* Kara Blessing • *Professional Development Dir.:* Michal Sigel • *H.R. Asst.:* Kirsten Koele • *Receptionist:* Jeanne Johnson • *Mail Room/Delivery:* Lou Webber

WOODSMITH MAIL ORDER
Operations Director: Bob Baker • *Cust. Service Mgr.:* Jennie Enos • *Warehouse Supr.:* Nancy Johnson • *Buyer:* Linda Jones • *Tech. Service Rep.:* Johnny Audette • *Admin. Assist.:* Nancy Downey • *Sr. Cust. Serv. Reps.:* Tammy Truckenbrod, Anna Cox, April Revell, Deborah Rich • *Cust. Serv. Reps.:* Valerie Jo Riley, Kim Harlan • *Warehouse:* Sylvia Carey

WOODSMITH STORE
Mgr.: Dave Larson • *Asst. Manager:* Tim Thelen • *Sales Staff:* Wendell Stone, Jim Barnett, Larry Morrison, Mark Johnson, Gregory Kauzlarich • *Office Mgr.:* Vicki Edwards

Woodsmith® (ISSN 0164-4114) is published bimonthly (Feb., Apr., June, Aug., Oct., Dec.) by August Home Publishing Company, 2200 Grand, Des Moines, IA 50312.
Woodsmith® is a registered trademark of August Home Publishing.

Copyright© 2002 August Home Publishing Company. All rights reserved.

Subscriptions: Single copy: $4.95. One year subscription (6 issues), $24.95. (Canada/International add $10 per year, U.S. funds.)
Periodicals Postage Paid at Des Moines, IA and at additional offices. USPS/Perry-Judd's Heartland Division Automatable Poly.
Postmaster: Send change of address to *Woodsmith*, Box 37112, Boone, IA 50037-2112.
Subscription Questions? Write to *Woodsmith*, P.O. Box 842, Des Moines, IA 50304-9961 or call 1-800-333-5075, 8:00 am to 5:00 pm, Central Time, weekdays. Or send an email to: orders@woodsmith.com
Email: woodsmith@woodsmith.com
World Wide Web: http://www.woodsmith.com

Printed in U.S.A.

AUGUST HOME PUBLISHING COMPANY

SAWDUST

Let's face it. Outdoor projects really take a beating. They're exposed to driving rain, baking sun, and freezing cold — conditions that would destroy many pieces of indoor furniture.

Now that's not to say that you can't have furniture outside. It's just that when it comes to *building* outdoor furniture, you need to think a bit differently than with indoor furniture.

For starters, it's important to be selective about the type of material you use. For all the outdoor projects in this issue (the Patio Table on page 6, the Bench on page 14, and the Tray Table on page 26) we chose cedar. One nice thing about cedar is it resists decay, so it stands up well to being outdoors. And it's commonly available. (We found all the material we needed at a local home center.)

Of course, there's more to building an outdoor project than the type of wood you use. The project itself has to be built to last. We designed the projects in this issue with thick, beefy parts. (We used "two-by" material and 5/4 decking boards for almost all the workpieces in our projects.) Combine that with mortise and tenon joints and splined miters, and you have sturdy projects that will last for years.

But don't worry that all this heavy-duty construction will result in a heavy-weight project. In addition to being durable, cedar has another advantage — it's lightweight. So even though these projects look solid, they're easy to pick up and move.

Of course, once you've built an outdoor project, you'll want it to look good for as long as possible. So we've included a short article on the type of outdoor finishes we like to use.

WOODSMITH TOURS

The first *Woodsmith Tour* this past May was a great success. Everyone on board rated it as "Excellent," and we heard such comments as "The presentations were even better than I expected" and "Each day was better than the one before."

So we're hitting the road again in October. We'll be visiting the shops of some of America's premier woodworkers, sawmills, and tool factories in the southeastern United States. And to top it off, the fall colors in the mountains should be absolutely spectacular that time of year. For more information call Jim, our tour coordinator, at 877-835-0913. Or visit our web site: www.WoodsmithTours.com.

Terry

Woodsmith Readers' Gallery

Visit other *Woodsmith* subscribers' workshops, and see photos of the projects they've built. It's all online in the new Readers' Gallery on the *Woodsmith* web site: **www.Woodsmith.com**

We want you to be part of the Readers' Gallery! To submit photos of your favorite *Woodsmith* projects or views of your shop, follow the instructions you'll find at the Reader's Gallery.

A LOOK INSIDE

CONTENTS

Features

Patio Table 6

This table will become the focal point of any patio or deck. Its round top and sturdy base are the perfect combination of grace and strength. And with our step-by-step instructions, its construction won't throw you any curves.

Wrap-Around Benches 14

Designed to complement the table, these benches have their own challenge — working with odd angles. But don't worry. There are lots of tips and simple jigs to make building them straightforward.

Mortise & Tenon Solutions 22

Here are our favorite shop-tested solutions for making mortise and tenon joints — plus a few shortcuts that will let you cut them faster, easier, and a little more accurately.

Tray Table 26

There's nothing tricky about this small side table, but there's more here than first meets the eye. With a handle opening at each end, the top conveniently lifts off the base to become a serving tray.

Wall Storage System 30

Want to maximize every inch of your shop or garage? Here's a unique, low-profile system that is easy to rearrange (or add on to later). And you can have it built in almost no time.

Outdoor Finishes 34

Here's a quick look at two popular outdoor finishes: exterior polyurethanes and penetrating oils. Learn how to decide which finish is right for your next outdoor project.

Departments

Tips & Techniques 4
Shop Notes 20
Sources 35

Patio Table *page 6*

Wrap-Around Benches *page 14*

Tray Table *page 26*

Wall Storage System *page 30*

TIPS & TECHNIQUES

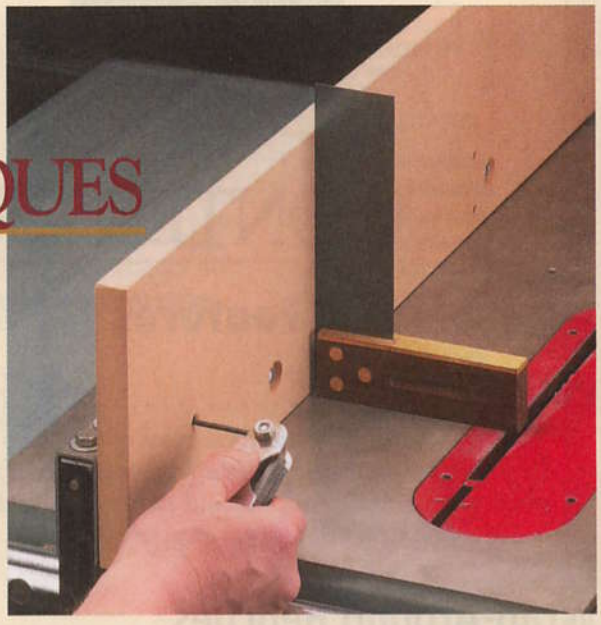

Adjustable Fence

While reading your article *Table Saw Tune-Up* from issue No. 138, I decided it was time to check my saw.

But after cleaning and tuning the entire saw, I realized that my rip fence could not be adjusted to 90° to the saw top.

What I ended up doing was making a fully adjustable auxiliary fence to attach to the rip fence.

As you can see in Fig. 1, it's a just a piece of MDF. But what allows it to be adjusted are some set screws. These can be adjusted to make sure the fence is perpendicular to the top of the saw.

Building the fence is nothing more than drilling a few sets of holes. The back of the fence receives T-nuts that hold the set screws, see Fig. 1a.

To attach the auxiliary fence to my rip fence, I used a pair of long machine screws that are counterbored into the fence, see Fig. 1b.

Finally, you can set the fence to 90° with an Allen wrench and a square.

You can see how the set screws are adjusted in the photo at right.

James Safranek
Memphis, Tennessee

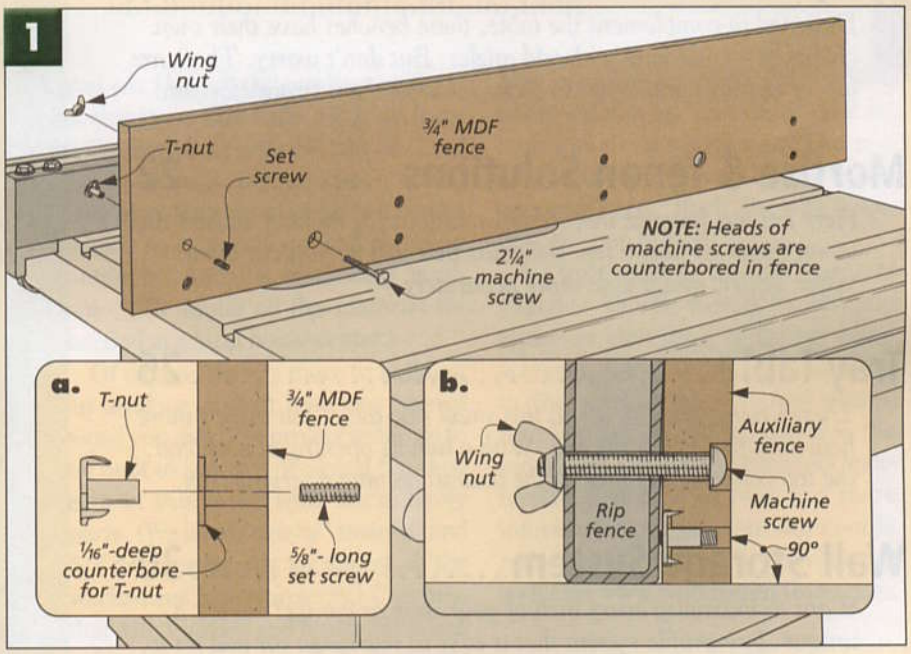

FREE
Online Tips

If you'd like even more woodworking tips, the solution is simple. Just visit us at our web site and sign up to receive a free tip via email every week.

www.woodsmith.com

Spring Clamp

Small frames can be a bear to clamp up sometimes.

So I came up with this quick modification to an ordinary spring clamp to help simplify things.

As you can see in the photo below, I ground the tips of the clamp to points. These points bite into the wood and hold the miter tight while the glue dries.

Pete Briach
Youngstown, Ohio

Koozie Connector

I use my shop vacuum for dust collection on a few of my smaller machines. But finding adapters can sometimes be hit or miss.

Well it just so happens that a foam rubber beverage *Koozie* fits right onto a vacuum hose. All you have to do is enlarge the small hole on the bottom to fit the dust port.

Ronald Chatmon
Overland, Missouri

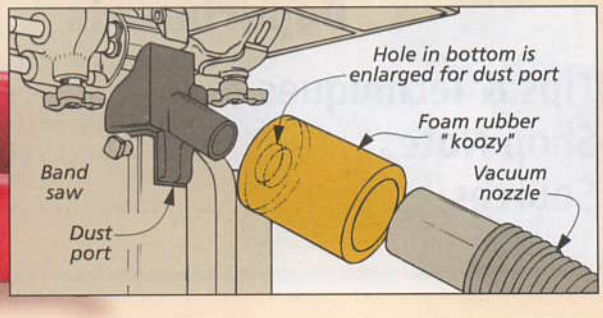

Scalloped Corner Jig

Not that long ago while making some plaques, I came up with a quick jig for making some decorative scalloped edges, like the one you see in the margin photo on the right.

The jig is just a plywood base with a pair of wood cleats set at 90°, like you see in Fig. 1. These cleats position the workpiece so the scallop cut in each corner ends up identical.

To cut the arc on each corner, I use my hand-held router. It pivots on a small pin, as shown in Fig. 1a. (This pin is just a nail with the head cut off.)

To allow the router to fit over the pivot pin, all I did was to remove one of the screws from the base plate. Then the pin fits into the screw hole.

The size of the arc will depend on where you place the pin on the jig, but you can also make the arcs smaller by positioning scrap spacer blocks against the cleats, just like you see in Fig. 2b.

But before you use this technique on a workpiece, you'll want to make a "dry run" on a scrap piece. This allows you to see where the bit will cut, and it also gives you a starting and stopping point.

To rout the piece, I first clamp it down with a pair of toggle clamps. Then I make two or three passes to cut all the way through.

In Fig. 2a, you'll notice I start in the lower corner and rout in a clockwise direction, or left to right.

Once the arc is cut, I can then rout a decorative detail all the way around.

Ken Schauer
Chigiak, Alaska

▲ *To create a decorative scalloped corner on a panel, all you need is a router and a simple jig.*

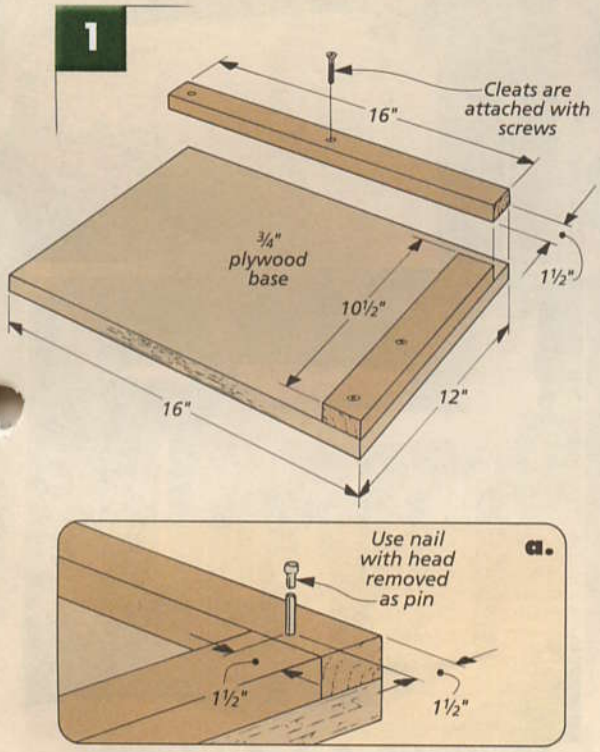

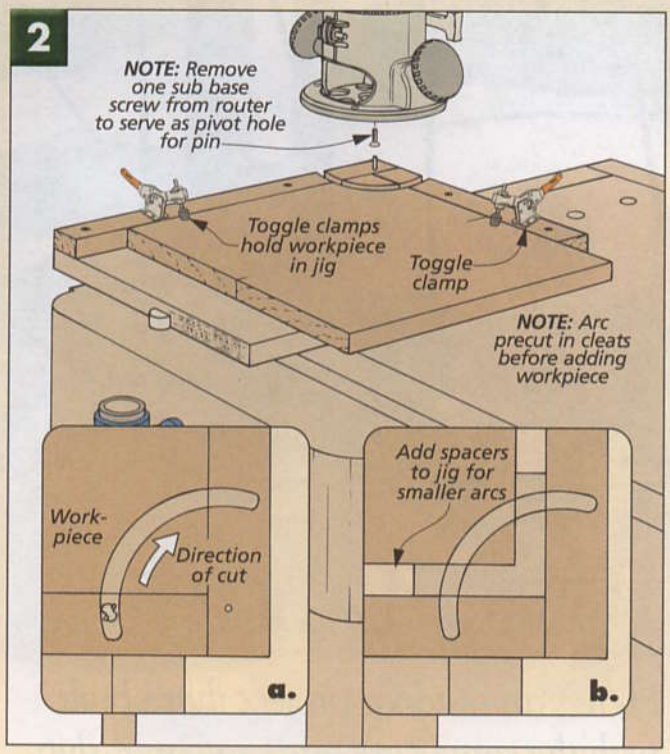

Aluminum Angle Spacer

When building the tool cart from issue No. 118, I found another use for the aluminum angle stock. To help align the drawer fronts, I used the cutoffs as spacers, as in the drawing below.

To use these spacers, all you need to do is place a small piece in each lower corner. Not only does this raise the drawer front, but it also centers the piece in the opening.

I use the spacers along with some double-sided tape to temporarily attach the drawer fronts. Then I screw it in permanently.

Tim Latimer
Via the Internet

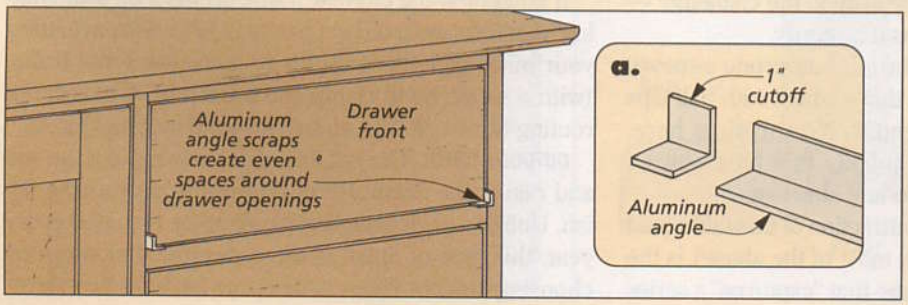

SUBMIT YOUR TIPS

If you have an original shop tip, we would like to hear from you and consider publishing your tip in one or more of our publications. Just write down your tip and mail it to: *Woodsmith,* Tips and Techniques, 2200 Grand Avenue, Des Moines, Iowa 50312. Please include your name, address, and daytime phone number in case we have any questions. If you would like, FAX it to us at 515-282-6741 or send us an email message at: woodsmith@woodsmith.com. We will pay up to $200 if we publish your tip.

PATIO TABLE

Here's an outdoor project that's built with the same care and craftsmanship as fine, indoor furniture.

▲ *You can buy a set of chairs for this table (as shown in the main photo), or you can build these matching benches. Plans start on page 14.*

Compared to other types of furniture, outdoor projects are really put to the test. Exposure to the ultraviolet rays of the sun and to extremes in heat and humidity mean that the project has to be designed to withstand a lot of abuse. This outdoor table is up to the challenge — yet its design is as attractive as it is sturdy.

BASE. To make the base of the table as strong as possible, it's built as a thick frame that's joined with half laps and through mortise and tenons. No surprises here. What *is* surprising is how quickly this base can go together with a few simple tips and shortcuts.

OCTAGONAL TOP. But the real attraction of this table (and the part that has to withstand most of the abuse) is the top. This is an eight-sided frame that "captures" a series of narrow slats. To make the miters of the top frame as strong as the base that supports it, I added a thick spline to each end. (The slats are supported by simple cleats added to the inside edges of the frame.)

If building a big circular frame seems a bit intimidating, don't worry. You'll get plenty of help — from setting your miter gauge accurately to assembling the frame (with a single band clamp and a handful of screws) to routing the circle with an easy-to-build trammel jig.

OUTDOOR FINISH. The last line of defense against the sun and rain is the finish. Here, I used a spar urethane finish. Unlike a deck stain that needs to be recoated every year, this type of finish is more durable. For more on choosing outdoor finishes, see page 34.

Construction Details

OVERALL DIMENSIONS:
52"W x 52"D x 29"H

NOTE:
Table built with cedar 2x6s, 5/4 decking, and 4x4 posts, see page 35

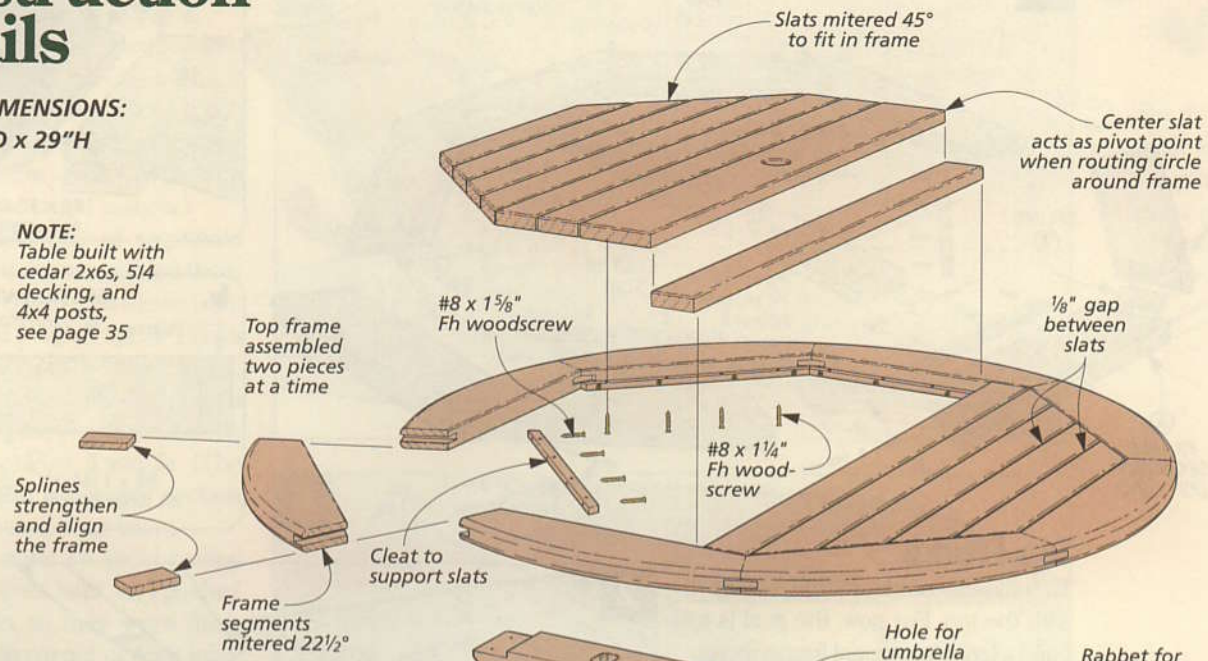

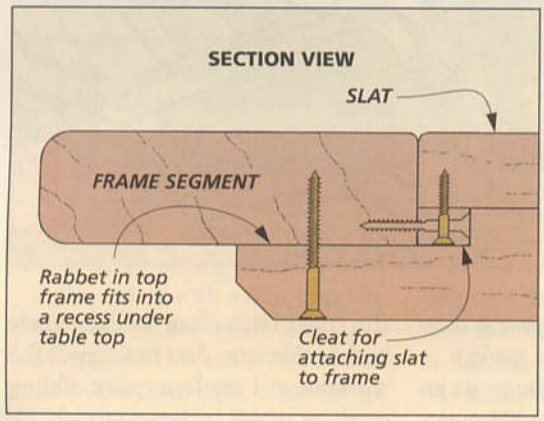

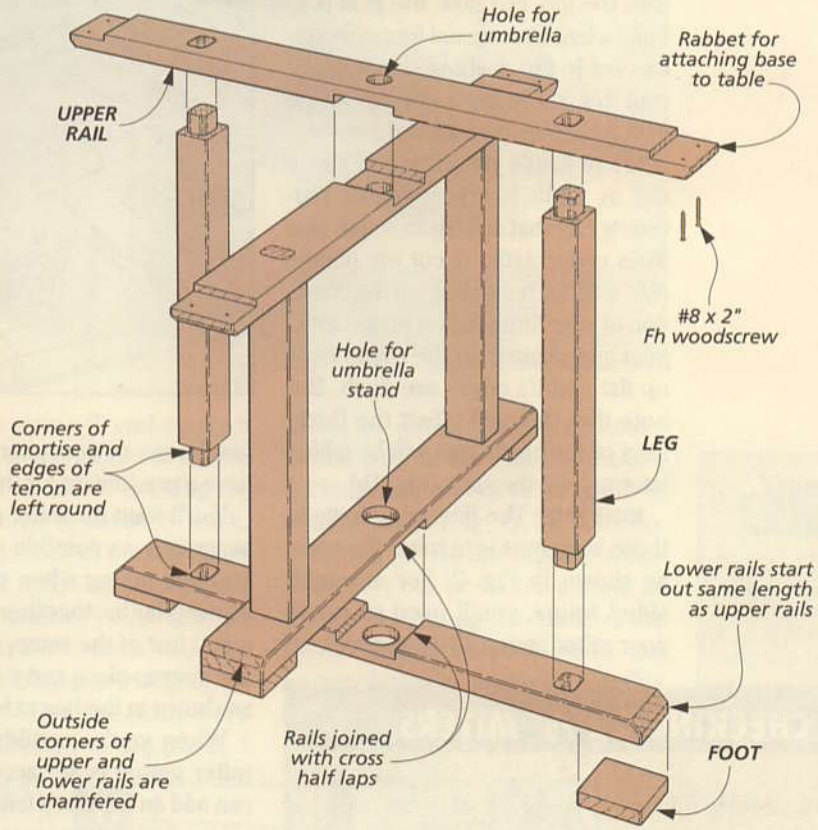

MATERIALS & SUPPLIES

A	Frame Segments (8)	1½ x 5½ - 23 rgh.
B	Splines (8)	½ x 3 - 2
C	Cleats (6)	½ x ¾ - 19 rgh.
D	Center Slat (1)	1 x 5 - 42
E	Slats (4)	1 x 2 15/16 - 42
F	Slats (2)	1 x 2 15/16 - 44 rgh.
G	Slats (2)	1 x 2 15/16 - 38 rgh.
H	Slats (2)	1 x 2 15/16 - 31 rgh.
I	Slats (2)	1 x 2 15/16 - 25 rgh.
J	Upper Rails (2)	1½ x 4½ - 46¾
K	Lower Rails (2)	1½ x 4½ - 46¾ rgh.
L	Feet (4)	1 x 4½ - 4½
M	Legs (4)	2½ x 3 - 27

- (28) #8 x 1¼" Fh Woodscrews
- (24) #8 x 1⅝" Fh Woodscrews
- (8) #8 x 2" Fh Woodscrews
- (8) #8 x 3" Fh Woodscrews (For assembly)

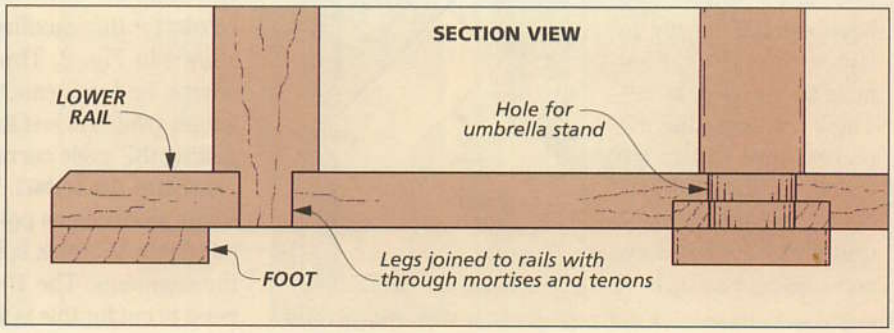

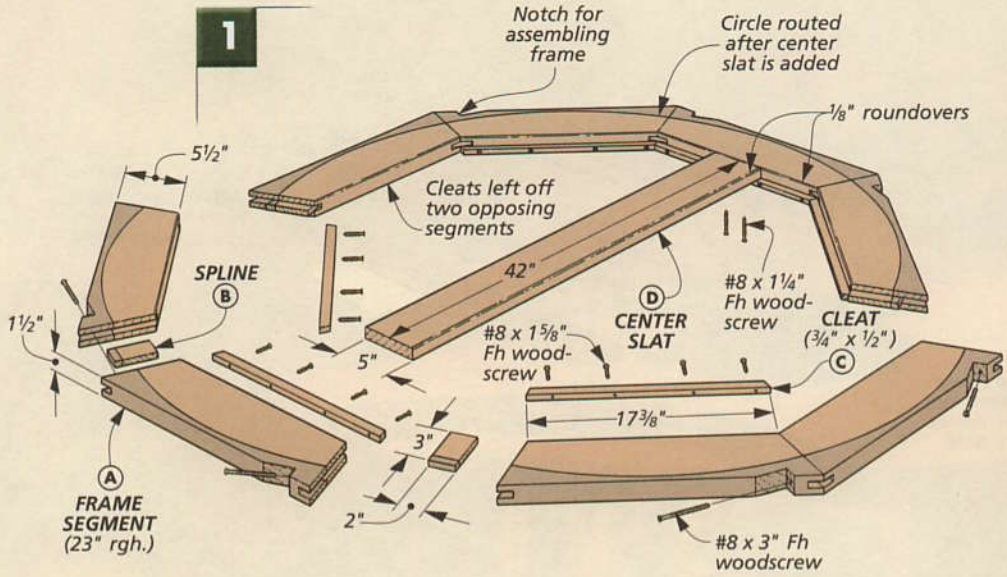

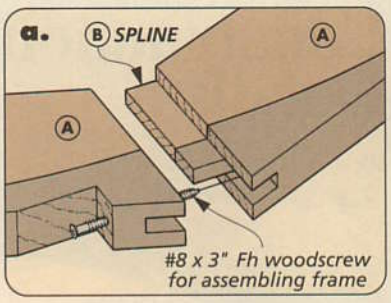

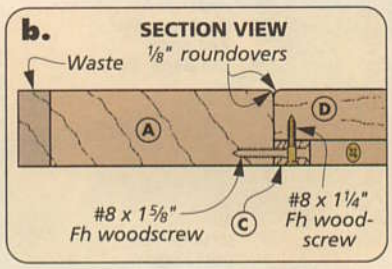

Top Frame

To build this outdoor table, I started with the top. For now, the goal is to build a large, octagonal frame, as you can see in Fig. 1 above. Later, you'll rout this frame into a circular shape with a shop-made trammel.

CUT TO ROUGH SIZE. The top starts out as eight identical *frame segments (A)* that are cut to rough size from cedar 2x6s. (I cut my blanks 5½" x 23".) Depending on the condition of your lumber, you may want to joint and plane it so the frame ends up flat and its edges are flush. But note that this will affect the thickness of the cleats that will be added later to hold the slats (Fig. 1b).

MITER ENDS. The first thing to do to these segments is to miter the ends, as shown in Fig. 2. For an eight-sided frame, you'll need to rotate your miter gauge 22½° degrees. (If you have a power miter saw, it may have a preset stop for this angle.)

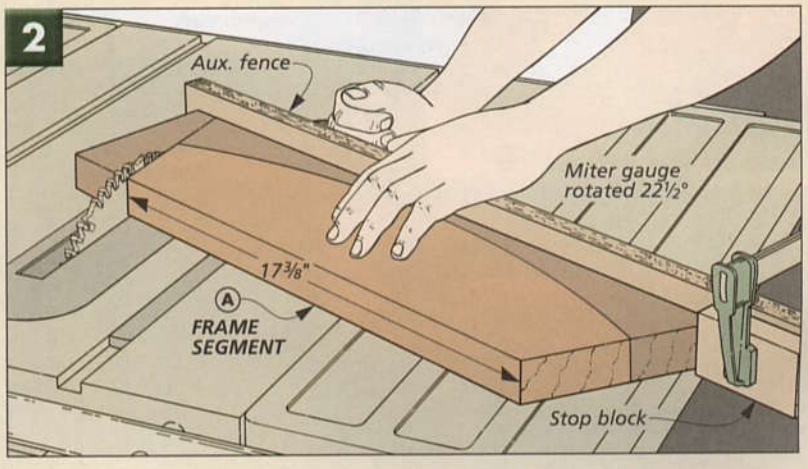

You'll want the miter gauge set as accurately as possible — it'll mean less fine tuning when you glue the frame blanks together. And for a quick test of the setup, all you need are a scrap piece and a 45° triangle, as shown in the box at left.

When you're confident that the miter gauge is set accurately, you can add an auxiliary fence and miter one end of each segment. But before you miter the other end, add a stop block to the auxiliary fence, as shown in Fig. 2. This way, all the pieces end up exactly the same length (which is just as important as getting the angle correct).

CUT SLOT FOR SPLINES. To make this frame as strong as possible, I decided to add ½"-thick splines between the segments. The 1"-deep slot you need to cut for this is too much for a slot cutter bit, so I used a dado blade in the table saw. And to support the workpiece, I made a quick sliding carriage, which is shown on page 21.

MAKE SPLINES. Next, you can cut the splines that fit into these slots. There's more to this than just getting the dimensions right. To end up with the strongest joint possible, you want the grain on the spline to run *across* the jointline of the two pieces you're gluing together, as shown in the margin photo at right.

There are two ways to make these splines. You could plane some stock down to ½" thick and then crosscut them into 2"-long pieces. Or if you don't have a planer, you can cut them from the end of a scrap piece. (I'll show you how on page 21.)

ASSEMBLE FRAME. At this point, the frame is ready to be assembled — and this process will be a lot less hectic than you might expect. That's

CHECKING 22½° MITERS

For an eight-sided frame, you need to cut an accurate 22½° miter, and here's a quick way to check your setup. First miter a scrap piece in half. Then dry assemble the pieces next to the rip fence, as shown here. Now a 45° triangle will quickly show you how accurate your setup is.

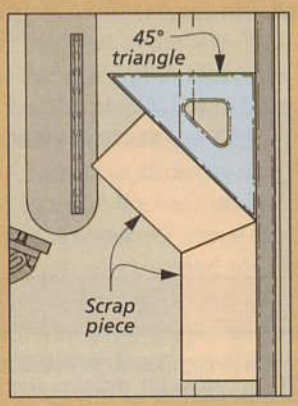

because I glued up the frame just two pieces at a time, as in Fig. 3.

To assemble the segments, you are going to want to use a glue that's made for outdoor use. (I chose polyurethane glue. You can find more information about this glue on our web site, see right margin.)

To hold each pair of segments together, I first dry assembled them using a band clamp. But the outside corner tended to open up. So I cut a notch near one end of each piece, using a band saw. Then I ran a screw across the jointline of each assembly, as in Figs. 3 and 3a. (The notch is part of the waste section that will be routed away later.)

One more note: To avoid having to trim the splines later on, I pushed the splines in so they were flush with the inside corner of each joint. (The small gaps this leaves will be covered by the slats later.)

After you have four pairs of segments glued up, you can use this same technique to glue the pairs into two halves. But before gluing the halves together, you'll want to dry assemble them to check their fit. (As you can see in Fig. 4, a long pipe clamp here works just fine for pulling the pieces together.)

If you end up with a little gap, like the one shown in Fig. 4a, then you'll want to plane the ends with a hand plane so they'll fit tight. (Remember to make the splines smaller too.)

CLEATS. With the frame assembled, it's time to add the ¾"-wide *cleats (C)* that will support the slats, as in Fig. 1. You only need *six* cleats in all (two segments don't need them), and you'll want to thickness the cleats so the slats will end up flush with the top of the frame, as shown in Fig. 1b. (I used 5/4 decking for the slats, which is about 1" thick, see page 35.) Then to get the cleats to fit into the frame without gaps, I mitered the ends at 22½° (Fig. 5) and attached them flush with the bottom of the frame, as in Fig. 6.

CENTER SLAT. When the cleats were glued and screwed to the frame, I added the *center slat (D)*. As I mentioned earlier, it's made from 5/4 decking, and it's cut to length to fit into the frame (Fig. 1). Then before attaching it to the frame, a ⅛" roundover can be routed around its top face *and* along the inside of the frame. (Remember to move the router clockwise around the inside of the frame). Now just center the slat and screw it in place (Fig. 7).

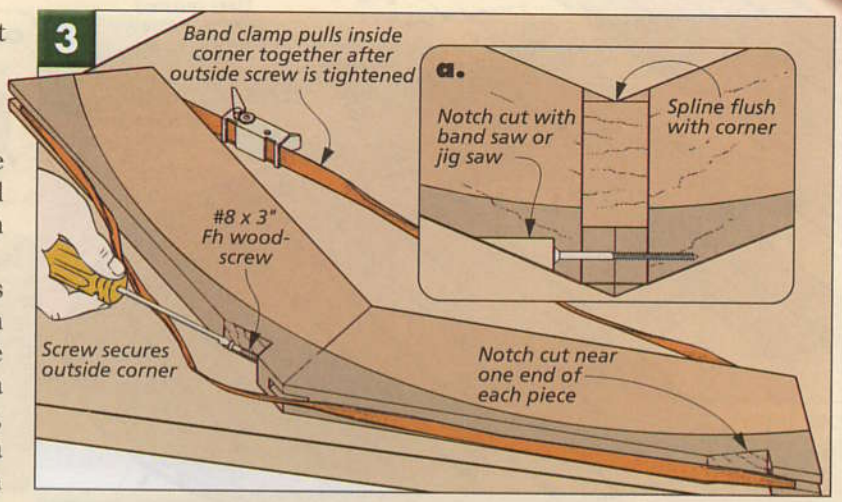

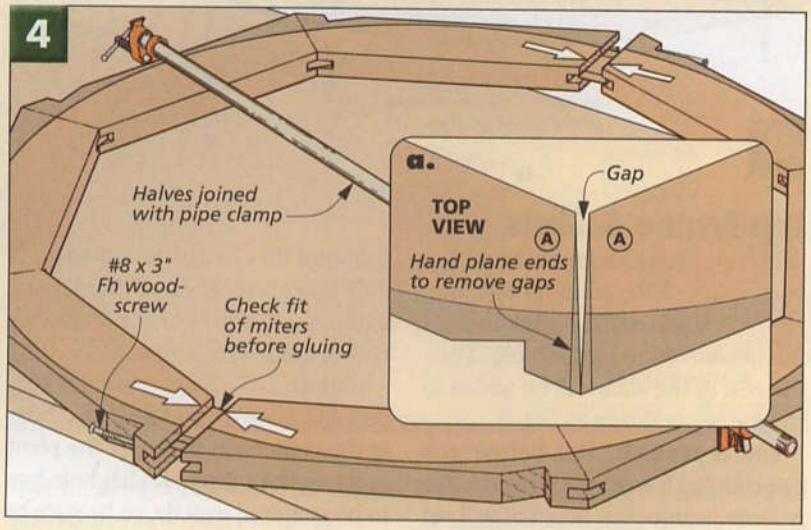

▲ *For the strongest miter joint possible, the grain on the spline should run perpendicular to the jointline.*

Woodsmith GO ON-LINE EXTRAS

For more on polyurethane glue, you can download a free article on our web site. Go to:

www.woodsmith.com

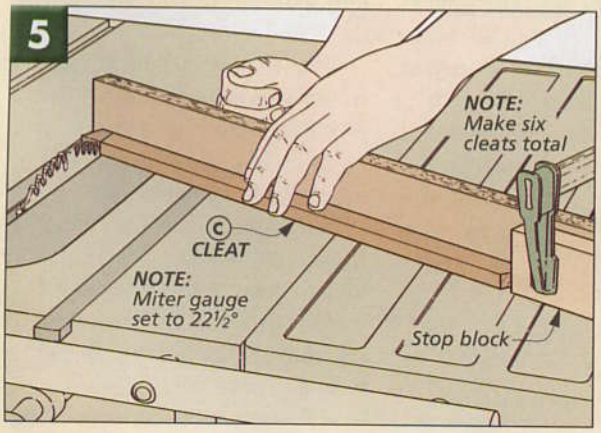

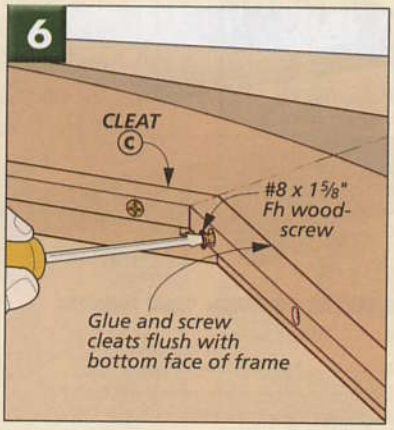

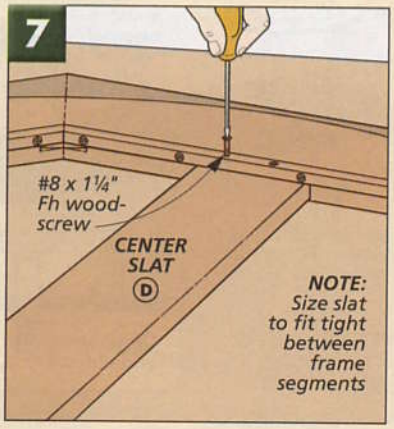

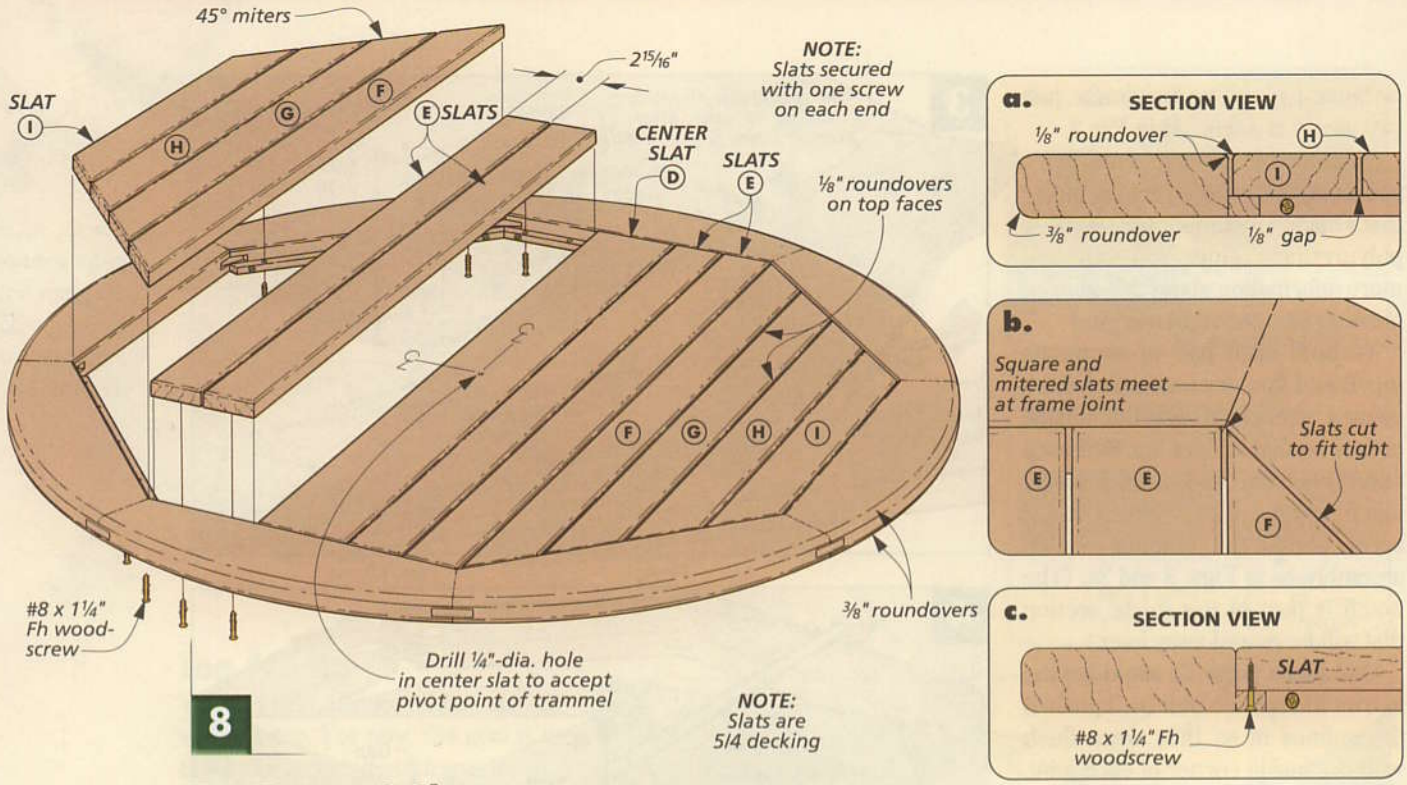

8

Top Frame & Slats

With the frame assembled and the center slat centered in its opening, you're ready to rout the circle around the outside edge of the table. Then the rest of the slats will be added to the frame, as shown in Fig. 8.

ROUTER TRAMMEL. But before you can rout the frame, you'll need a fairly large trammel — one that will cut a 26" radius. If you don't have a trammel this large, don't worry. It only takes a piece of 1/4" hardboard and a short dowel to make one, as shown in the box below.

DRILL HOLE. With the trammel built, you still need to drill a 1/4"-dia. hole in the center slat to accept the pivot point on the trammel. This hole has to be centered exactly, so be sure to double-check your measurements.

Note: If you're *not* planning to use an umbrella with the table and don't want the pivot point hole in the top, you could screw a spacer to the bottom of the center slat, drill a hole in the spacer, and then rout the circle from the *bottom* side of the frame.

ROUT FRAME. Before you turn on the router, first set a couple scrap pieces under the frame, as in Fig. 9.

SHOP-BUILT ROUTER TRAMMEL

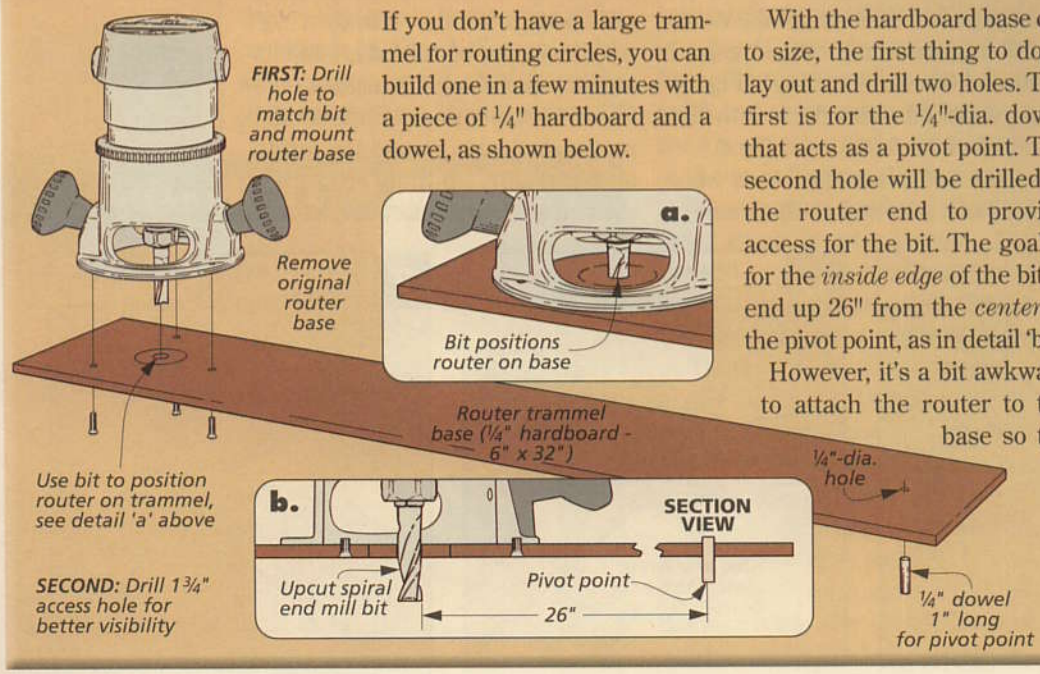

If you don't have a large trammel for routing circles, you can build one in a few minutes with a piece of 1/4" hardboard and a dowel, as shown below.

With the hardboard base cut to size, the first thing to do is lay out and drill two holes. The first is for the 1/4"-dia. dowel that acts as a pivot point. The second hole will be drilled at the router end to provide access for the bit. The goal is for the *inside edge* of the bit to end up 26" from the *center* of the pivot point, as in detail 'b.'

However, it's a bit awkward to attach the router to the base so the bit is in just the right position. So I came up with a shortcut.

I started by drilling a 1/2"-dia. hole that matched the diameter of the 1/2" spiral end mill bit I planned to use. (A straight bit will also work as long as it's long enough to rout through the 1 1/2"-thick frame.)

Now mount the bit in the router and set it into this hole — it'll position your router perfectly while you mark the mounting holes (detail 'a').

Before you mount the router to the trammel base, it's a good idea to enlarge the hole so it's easier to see the bit. Then simply glue a 1"-long dowel in the base as a pivot point.

This way, you won't rout into your bench. Then to get started, you'll have to lower the bit into the frame. And while routing, you're goal is to minimize chipout. So here are three steps you can take to avoid it.

First, it's best to take *light* passes. They're less likely to chip out than deep ones. (I lowered my bit only 1/4" with each pass.) Second, move the router slowly. The more wood the bit tries to remove, the more likely it'll tear out. And finally, this is one of those few occasions when I'd recommend backrouting. For one thing, a hand-held operation is easier to hold securely. Plus the router is held in check by the trammel.

ROUNDOVER & SAND. When the circle has been routed, you still need to rout a 3/8" roundover, this time in a *counterclockwise* direction around both outside edges, as in Fig. 10.

SLATS. As you can see in Fig. 8, all that's left to add to the table top are the slats. When cutting these pieces to length, you want them to fit tight between the frame, as shown in Fig. 8b. But what's more important is the space *between* the slats. Here, you want consistent 1/8" gaps.

The two *slats (E)* on each side of the center couldn't be any easier. They're simply cut to final length. For now, I merely set them in place next to the center slat, using 1/8" spacers between them.

The remaining *slats (F, G, H, I)* really aren't much harder. They're mitered on each end, but this is a standard 45° miter and shouldn't give you any trouble. I started with the shortest slat and worked my way in, always following the same procedure, as shown in Fig. 11.

First, I set the blank in place, using a spacer to position it. Then I marked the length off the frame. When mitering the piece to length (Fig. 12), I used a stop block so I could cut two slats the same length. Then I would set the slat in place and begin work on the next.

Before you miter the last slat, you might want to double-check that it's going to fit with equal gaps on either side. If not, you'll either need to trim it slightly narrower or even cut a new slat that's a little wider. (Ending up with one slat a little different than the others is less noticeable than having inconsistent gaps.)

ROUNDOVER EDGES. Before the slats are attached to the table, there's an 1/8" roundover that's routed on the top face of each, starting with the ends. Then you can screw all the slats in place, putting a single screw in the center of each end (Fig. 8c).

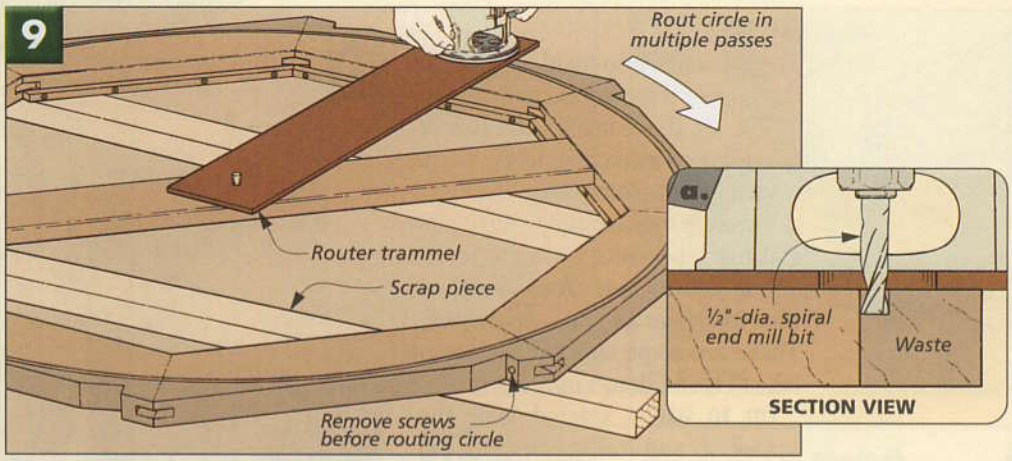

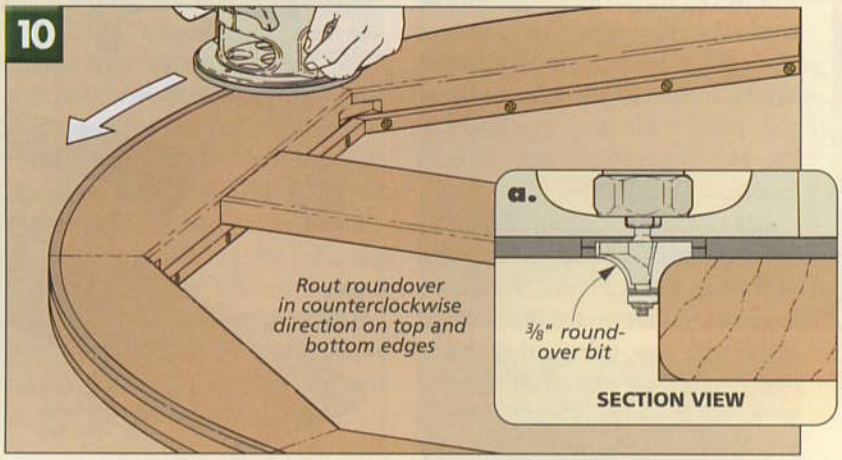

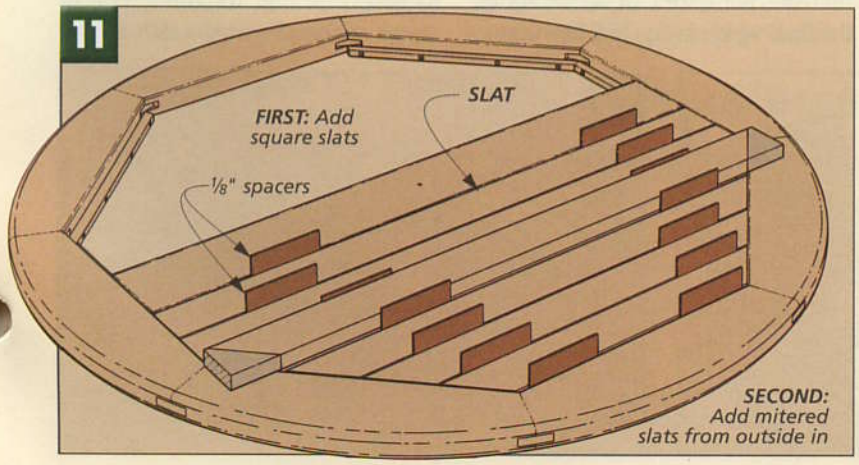

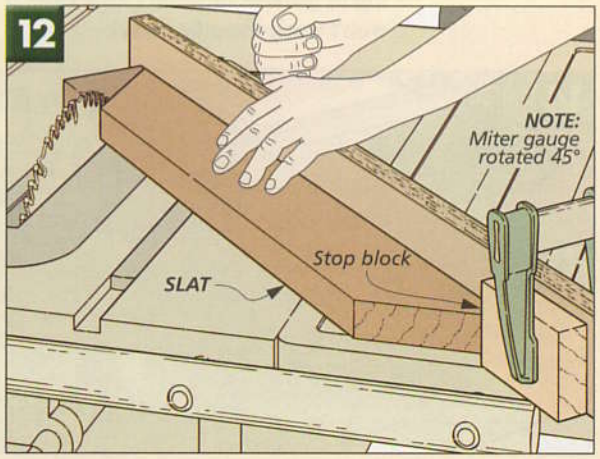

Base

The last section to build is the base that supports the top. As you can see in Fig. 13, this consists of a pair of cross-shaped assemblies that are connected by four sturdy legs.

Through mortise and tenon joints and half laps make for some really strong joinery here. And it's not as time-intensive as you might think. There are some shortcuts you can take to speed things up.

CUT TO SIZE. I started with the *upper (J)* and *lower rails (K)*. All four pieces are cut from 2x6 stock to finished width ($4\frac{1}{2}$"). But instead of cutting the lower rails to finished length, I made all the rails the same size ($46\frac{3}{4}$") for now, as shown in Fig. 14c. This way, the joinery on all four pieces will be identical.

HALF LAPS. The first thing I did was to cut the half laps that join the rails, as you can see in Fig. 14. With such long pieces, I like to cut the half laps at the table saw, using a dado blade plus a long auxiliary fence screwed to the miter gauge. The first step is to raise the blade until it's exactly half the thickness of the stock, as in Fig. 14a. (You can test the height of the blade by cutting some end laps on scrap pieces that are the same thickness as the rails.)

When the blade is set, it's time to set the stop block so that all the half laps will be identical. Here, you'll want to measure from the end of the rail to the *far* shoulder, as in Fig. 14. This way, you can cut both shoulders (flipping the piece end-for-end between passes) and then remove the waste in between *without* having to remove the stop block (which won't work the other way).

▲ *Want a shortcut for making the through mortises? You can find one on page 23.*

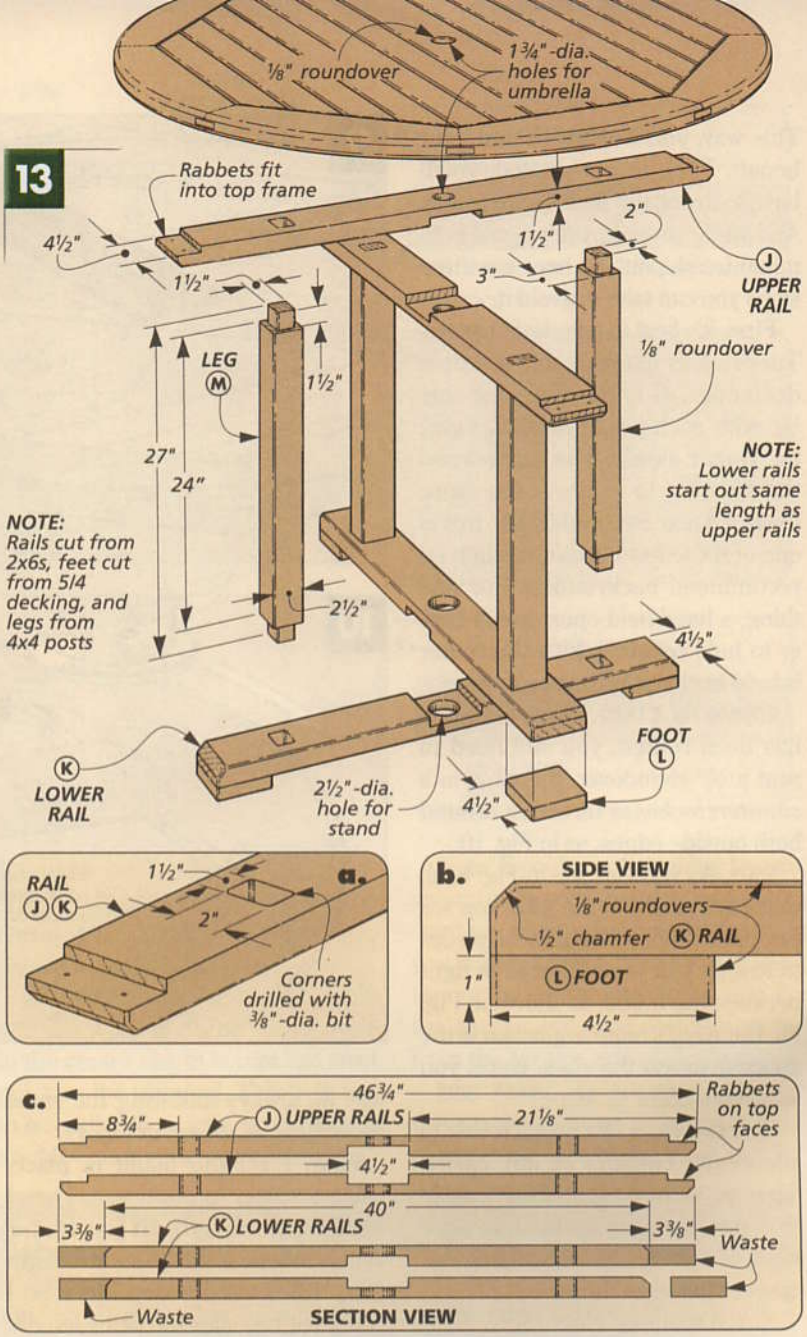

One more thing. When setting the stop block, don't try to get it in exactly the right place on the first try. The fit could end up a bit sloppy. Instead, it's better to sneak up on the final width of the half lap.

NOTCH TOP. When the half laps are cut, don't put away the dado set just yet. The *upper* rails need to have a $\frac{1}{2}$"-deep rabbet cut across the ends, as shown in Fig. 15. You'll want to sneak up on the final width of this

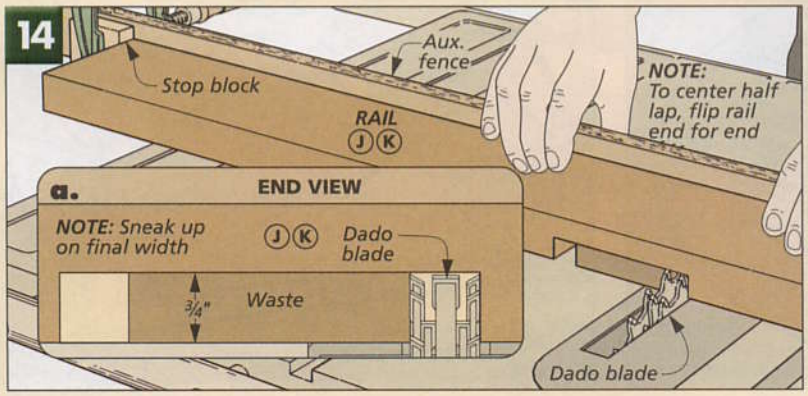

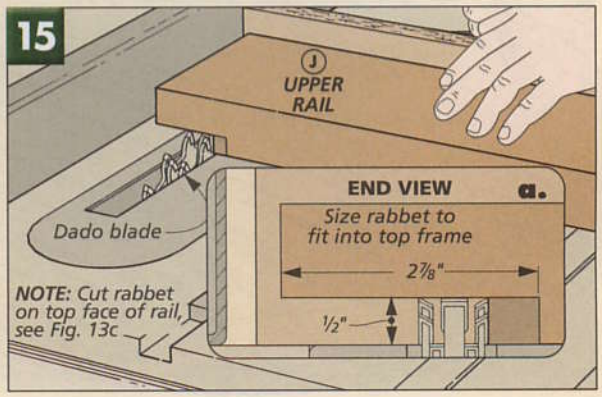

rabbet until the piece fits into the frame (and cleats), as in Fig. 18.

MORTISES. Now you can put away the dado blade and begin work on cutting the mortises, as shown in Fig. 13a. Through mortises can be a real challenge to cut accurately. But the ones here shouldn't give you any problems. They can be made with just a drill press and a jig saw, as you can see in the left margin photo and the article on page 23.

Since the walls of these mortises were fairly smooth and didn't need to be cleaned with a chisel, I decided to leave the corners round too. (It'll be a lot quicker to round over the tenons later.)

There are still a couple things to do before the rails can be glued together, but now's the time to cut the lower rails to their final length (Fig. 13c). Just remember to cut a little from each end to keep the half laps and mortises centered.

CHAMFER ENDS. Now that the lower rails are cut to length, each rail gets a ½" chamfer (Fig. 13b), which I cut at the table saw, using an auxiliary fence to support the piece.

ADD FEET. The last step before the rails can be assembled is to add the *feet (L)* to the lower rails, as shown in Figs. 13 and 13b. These are just 1"-thick pieces that are cut 4½" square and glued flush with the ends of the lower rails.

ASSEMBLE FRAME PIECES. The rails are easy enough to assemble. A couple short clamps is all you'll need to secure them. Then when the glue has dried, you can rout a ⅛" roundover on the top edges of the lower assembly and the bottom edges of the upper assembly.

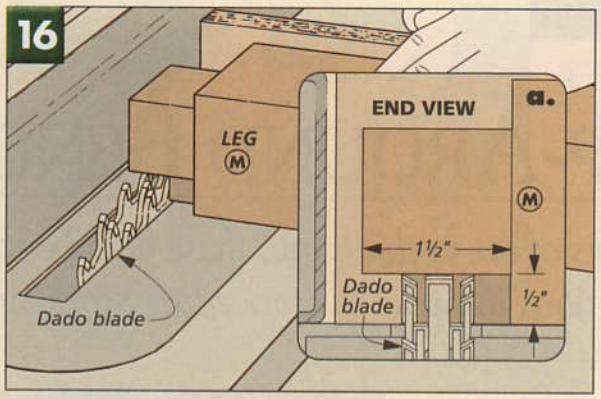

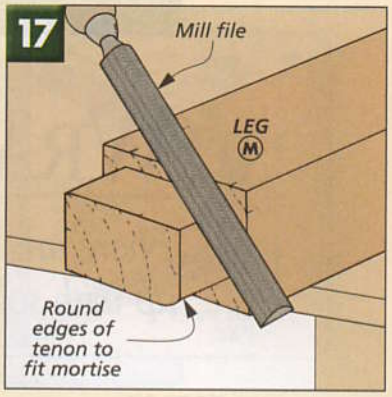

LEGS. Finally, you're ready to make the *legs (M)* that connect the upper and lower assemblies (Fig. 13). These legs start out as 4x4 posts that are cut to final length (27") and then ripped to 2½" x 3".

CUT TENONS. There's not much to the legs. The first task is to cut tenons to fit the mortises in the rails. As you can see in Fig. 16, I did this with a dado blade at the table saw, using the fence as a stop. And as I mentioned earlier, the tenons were rounded with a file to match the corners of the mortises (Fig. 17).

To complete the legs, I routed a ⅛" roundover on their edges. Then after gluing the base together, it can be screwed to the top, as in Fig. 18.

HOLES FOR UMBRELLA & STAND. Once the table was assembled, I drilled centered holes for an umbrella and a flat, steel stand, as in Fig. 13 and the photo at right. The size of these holes will vary, but there's no need to make them tight. Instead, look for some inexpensive hole saw bits at the hardware store. They'll do just fine.

FINISH. As I mentioned earlier, this table was finished with several coats of spar urethane. For more on this outdoor finish, turn to page 34.

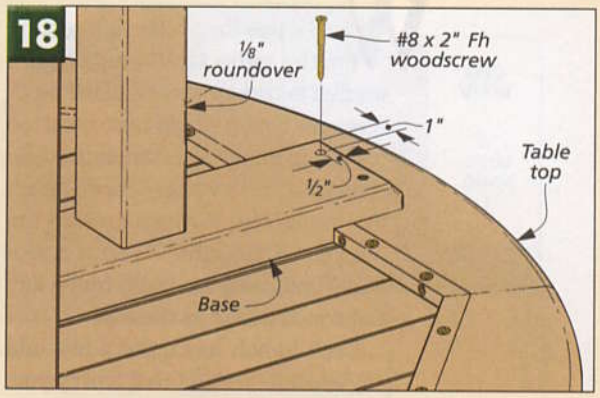

▲ *To create access for an umbrella and a metal stand, I drilled some large holes in the table using two inexpensive hole saw bits.*

CUTTING DIAGRAM

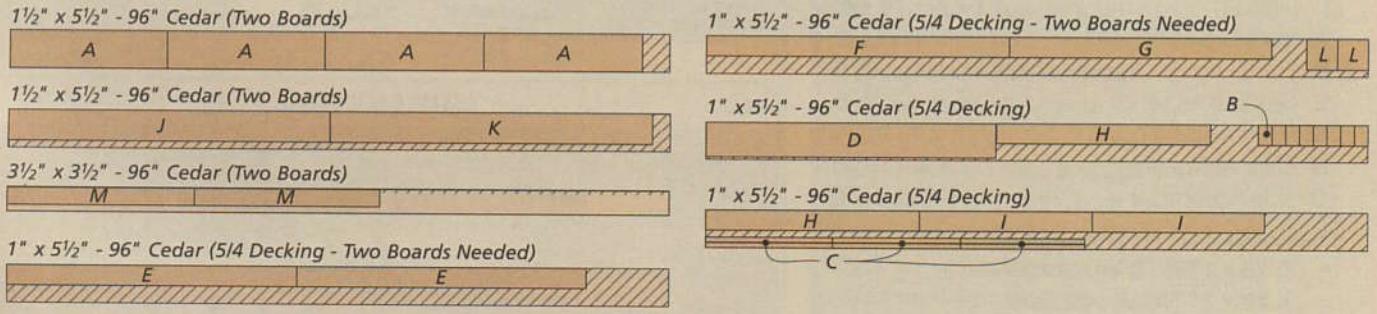

WRAP-AROUND BENCHES

There are lots of angles built into these little benches. But we came up with solutions to make the procedure surprisingly straightforward.

When it was time to design seating for the patio table on page 6, I wanted to "break outside of the box." A square bench would have been too plain, and a chair too complicated. So I came up with a wedge-shaped bench that looks like it wraps around the outside of the table — with a seat that's built with the same frame and slat construction as the top.

Each bench has quite a few odd angles, but don't let that worry you. There are enough simple jigs and tips so that you don't have to fuss with complicated setups or wrestle with shifting assemblies.

Note: I built four of these benches, but if you need a couple more seats, you could fit up to six comfortably around the patio table. (Keep in mind that the materials and supplies list below and the cutting diagram on page 15 are for *one* bench only.)

SEAT FRAME. To build the benches, I started with the seats. As I mentioned, they're designed to match the table. But instead of a round frame, these seats are sort of pie-shaped. This means the front and back angles aren't the same. Still, you won't find this to be a problem. A single jig works for both angles. But more on that in a minute.

MATERIALS & SUPPLIES

A	Frame Back (1)	1½ x 5½ - 33 rgh.
B	Frame Front (1)	1½ x 3 - 15 rgh.
C	Frame Sides (2)	1½ x 3 - 20 rgh.
D	Frame Splines (4)	½ x 4 rgh. - 2
E	Cleats (2)	½ x ¾ - 12¾
F	Slats (1)	1 x 2¾ - 21 rgh.
G	Slats (1)	1 x 2¾ - 19 rgh.
H	Slats (1)	1 x 2¾ - 16 rgh.
I	Slats (1)	1 x 2¾ - 14 rgh.
J	Back Leg Halves (4)	1½ x 2½ - 16½
K	Front Leg Halves (4)	1½ x 2½ rgh. - 16½
L	Leg Splines (4)	⅜ x ¾ - 16½
M	Front Apron (1)	1 x 3 - 10¾
N	Back Apron (1)	1 x 3 - 22 5/16
O	Side Aprons (2)	1 x 3 - 14⅞

- (8) #8 x 1¼" Fh Woodscrews
- (8) #8 x 1⅝" Fh Woodscrews
- (9) #8 x 3" Fh Woodscrews

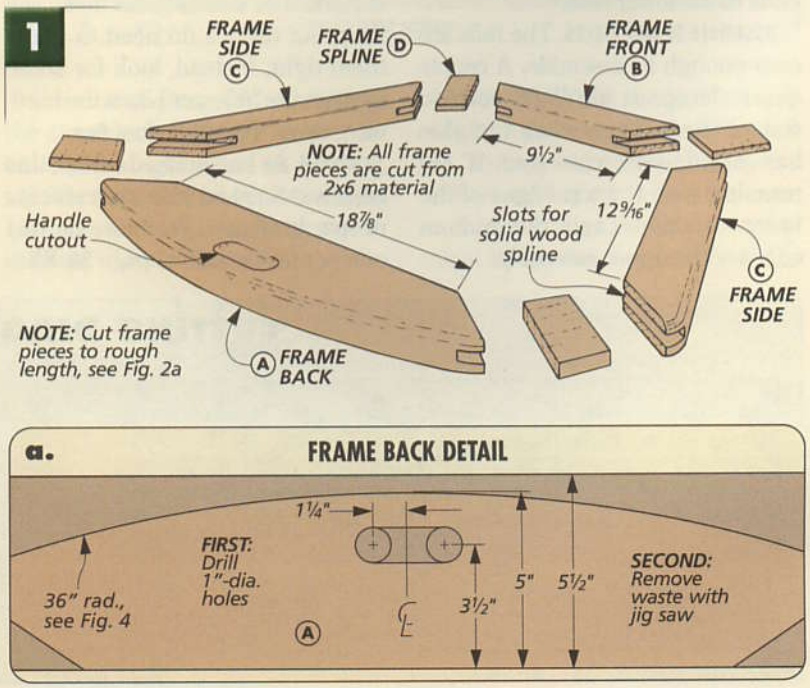

CUT TO SIZE. To begin, the *frame back (A), front (B)*, and *sides (C)* can be cut to rough length, as in Fig. 2a. Like the frame of the table, the blank for the back starts out extra wide for the curve you'll cut later (Fig. 1a). But the front and sides can be ripped to finished width (3"). To make sure they're flat and a consistent thickness, you may want to joint and plane these blanks, but this will affect the size of the cleats later.

MITER ENDS. With the frame pieces roughed out, the first thing to do is to miter their ends. Because of the shape of the frame, there are two different angles to cut here (34° and 56°), and you want them to be as accurate as possible so the frame goes together without any gaps.

Fortunately, there's an easy-to-build sled that will almost ensure accuracy. It's shown in Fig. 2 above, but there's a lot more on how to build and use the sled on page 20.

CUT SLOT FOR SPLINES. With the ends of the frame pieces mitered, the next step is to cut the slots on the ends that will hold the ½"-thick splines, as shown in Figs. 1 and 3. (These splines will strengthen the corners and help align the pieces as you glue the frame together.)

If you've already built the outdoor table, then you know exactly how this is done. In fact, the same jig will work just fine for these frame pieces, even though these are two different angles, as in Fig. 3. For more on this jig (and on cutting the strongest splines possible), turn to page 21.

SHAPE BACK. At this point, the front and side frame pieces are ready to be assembled. But before that can happen, there's some shaping you will need to do to the back piece, as you can see in Fig. 1a.

To lay out the curve on the back, I made a simple beam compass, as shown in Fig. 4. This is just a thin strip of ⅛" hardboard with two holes drilled 36" apart. For the pivot point, I nailed through one of the holes into a small scrap block and carpet taped the block to my bench. (As you can see in Fig. 4, I drew a line along my bench so it was easy to align the center of the back piece with the pivot point.)

Now center the back piece on the line and position it so it'll end up 5" wide. Then after you draw the curve you can cut it out with the band saw (or jig saw) and sand it smooth.

The last step is to create the handle opening (Fig. 1a). To do this, simply drill two 1"-dia. holes and cut out the waste between them with a jig saw. You can either rout the ¼" roundover around the opening now or wait until you rout the edges of the frame after assembly.

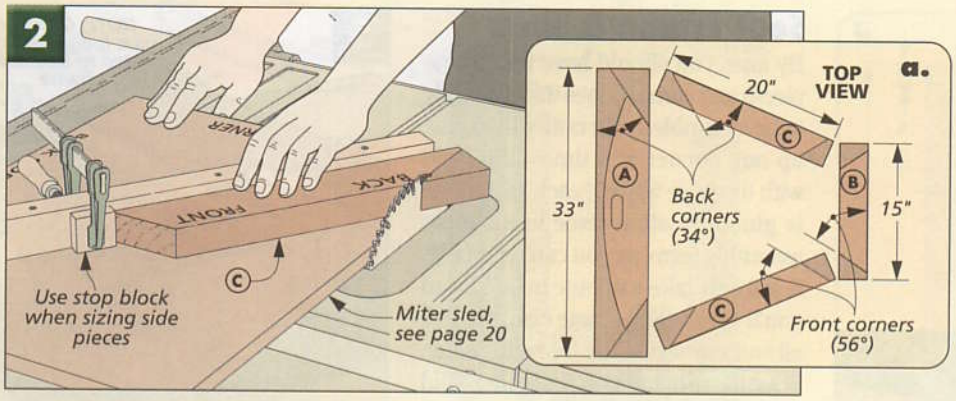

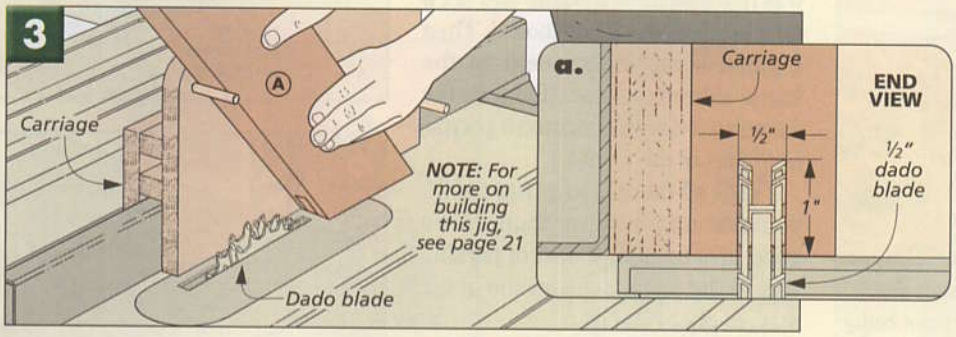

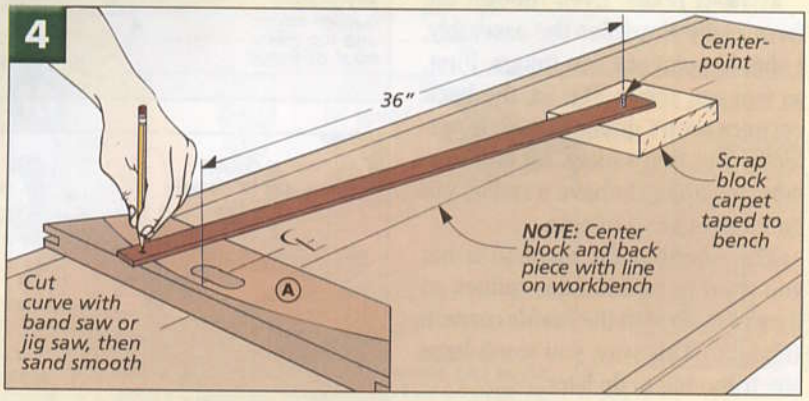

CUTTING DIAGRAM

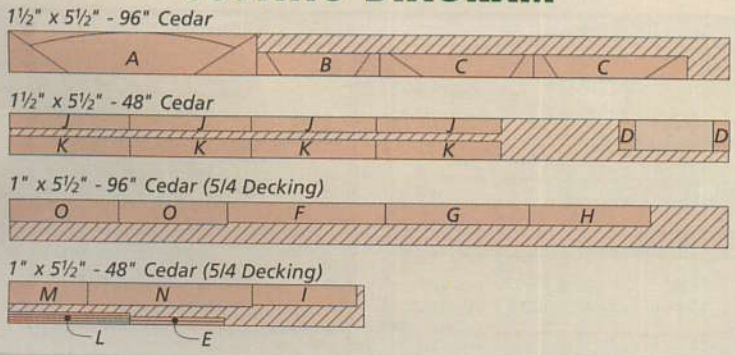

Seat Frame & Slats

By now, you should have four frame pieces and some splines that are ready to be assembled. But rather than glue up one corner at a time (like I did with the table frame), each seat frame is glued up all at once in a simple assembly form, as you can see in Fig. 5. It'll only take a minute to build, and you'll only need a single clamp to pull all four corners of the frame together.

ASSEMBLY FORM. The first thing I did was dry assemble a frame and set it on a large piece of hardboard. Then I glued scrap pieces next to the frame sides and front. (Remove the frame so it doesn't become a permanent part of the form.)

▲ *To prevent the frames from being glued to the form, apply a generous amount of paraffin wax to the corners.*

That's all there is to it. But before you glue up your first frame, it's a good idea to apply a coat of paraffin wax to the form, like you see in the margin photo at left.

ASSEMBLE FRAME. Even though the form really simplifies the assembly, I should point out two things. First, as you can see in Fig. 5a, the back corners aren't going to match perfectly. But that's okay. All four corners are going to have a radius cut on them in just a minute.

The other thing to mention is that you want to position the splines so they're flush with the *inside* corners (Fig. 5a). This way, you won't have any trimming to do later.

ROUND EDGES. When the glue has dried, I laid out and cut the curves on the corners (Fig. 5a). Then I routed roundovers on the inside and outside edges of the frame, as shown in Figs. 6 and 6a.

SLAT CLEATS. Now you can make the *cleats (E)* that will be attached to the side pieces, as shown in Fig. 7. The important thing is that you size them so the 5/4 decking boards you'll use as slats will end up flush with the top of the frame.

I mitered the ends of the cleats with the same jig that I used for the frame (refer to page 20). Then I screwed the cleats in place, flush with the bottom edge, as in Fig. 7a.

SLATS. To complete the seat, all that's left is to add the slats. I did this by setting them in place with 1/8" spacers to set the gaps, as shown in Fig. 8. Then I marked the length *and* angle off the seat frame and cut

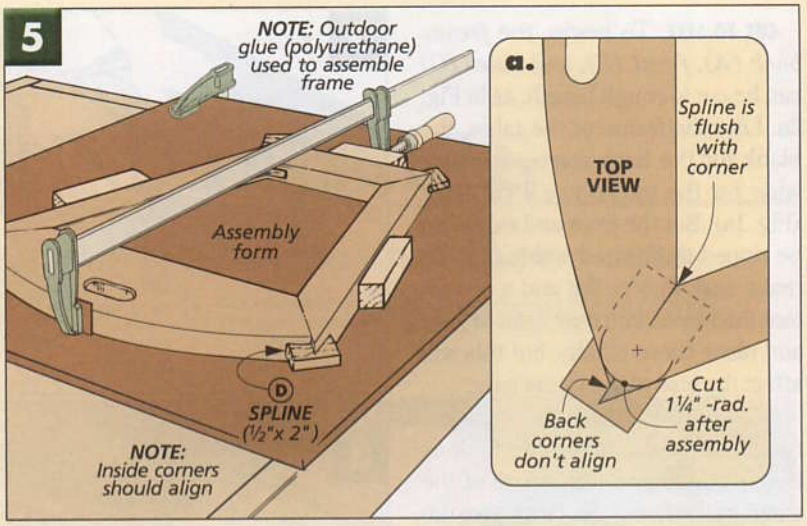

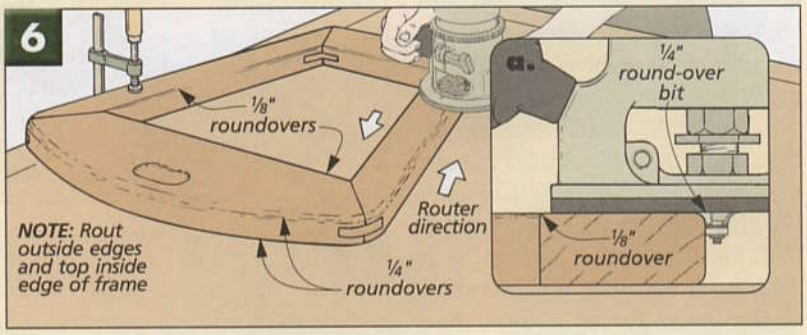

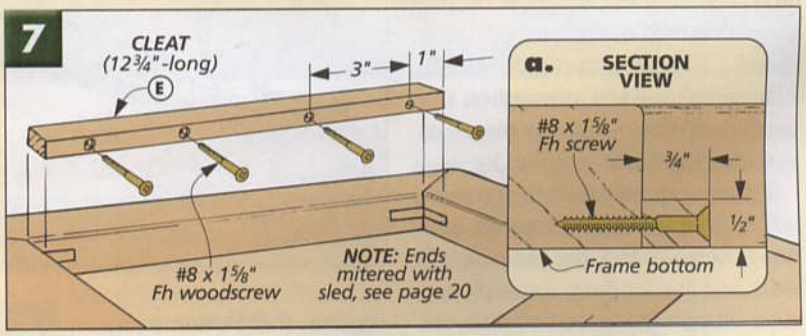

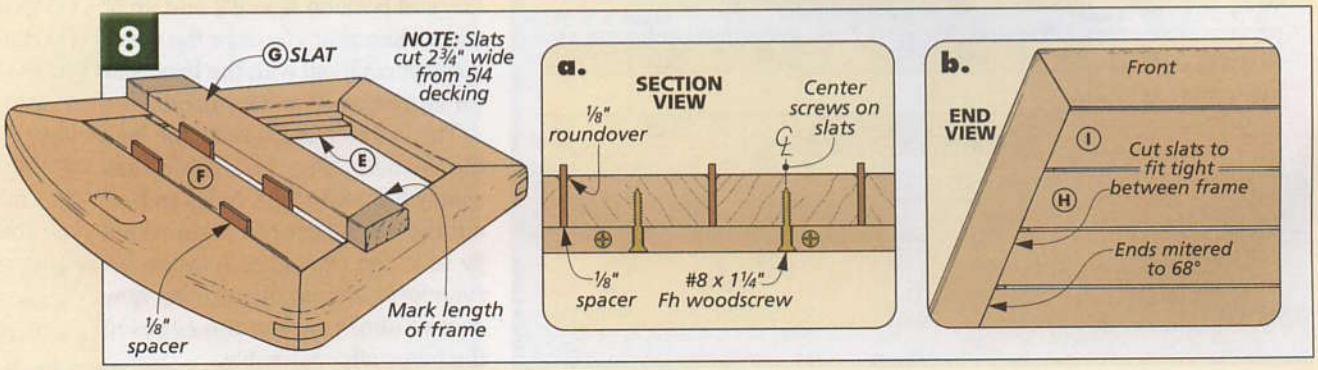

the slats to these layout marks. (The slats are cut to length to fit tight between the sides, as in Fig. 8b.)

Once the slats are mitered, the top edges can be rounded over, and you can attach them to the cleats with a screw at each end (Fig. 8a).

BASE

With the seat of the bench complete, it's time to work on the base. It matches the shape of the seat frame, so I had to make a choice: cut angled tenons (or mortises) or make the legs angled. I decided to make angled legs out of two halves (Fig. 9), and it turned out easier than I expected.

LEG HALVES. To make the legs, I started by cutting eight identical blanks from "two-by" stock. The front legs will actually end up a little narrower, but with the blanks all the same, you'll only need to make one setup for the mortises, as in Fig. 10a.

MORTISES. With eight mortises to cut for each bench, I wanted the fastest method possible. So I used a spiral end mill bit at the drill press, as in Fig. 10. This takes a little more setup time, but the cheeks of the mortises end up clean, so there's no need to get out your chisels. (For more on this, see page 22.)

CUT TO SIZE. With the mortises cut, you can set aside four pieces for the *back leg halves (J)*, while you cut the *front leg halves (K)* to finished width (2"). Just be sure you don't trim the face with the mortise.

BEVEL EDGES. The next step is to bevel one edge of each leg (the edge opposite the mortise). As you can see in Fig. 9a, the angles for the front and back legs are different, but one "setup" is all you need to make. Tilt the saw blade 34°, as shown in Fig. 11. Then position the fence to leave a 5/16" shoulder between the blade and fence (Fig. 11a). Now you're ready to cut the back legs. The back legs are cut on edge, and you want to make sure that each *pair* are cut with the mortise at opposite ends, as shown in Fig. 11.

With the back legs beveled, you can reposition the fence (Fig. 11b) and bevel the front legs. Again you want the mortises at opposite ends with each pair of legs, but this time, the *face* of the piece is down on the table, which is what makes this angle different from the back legs.

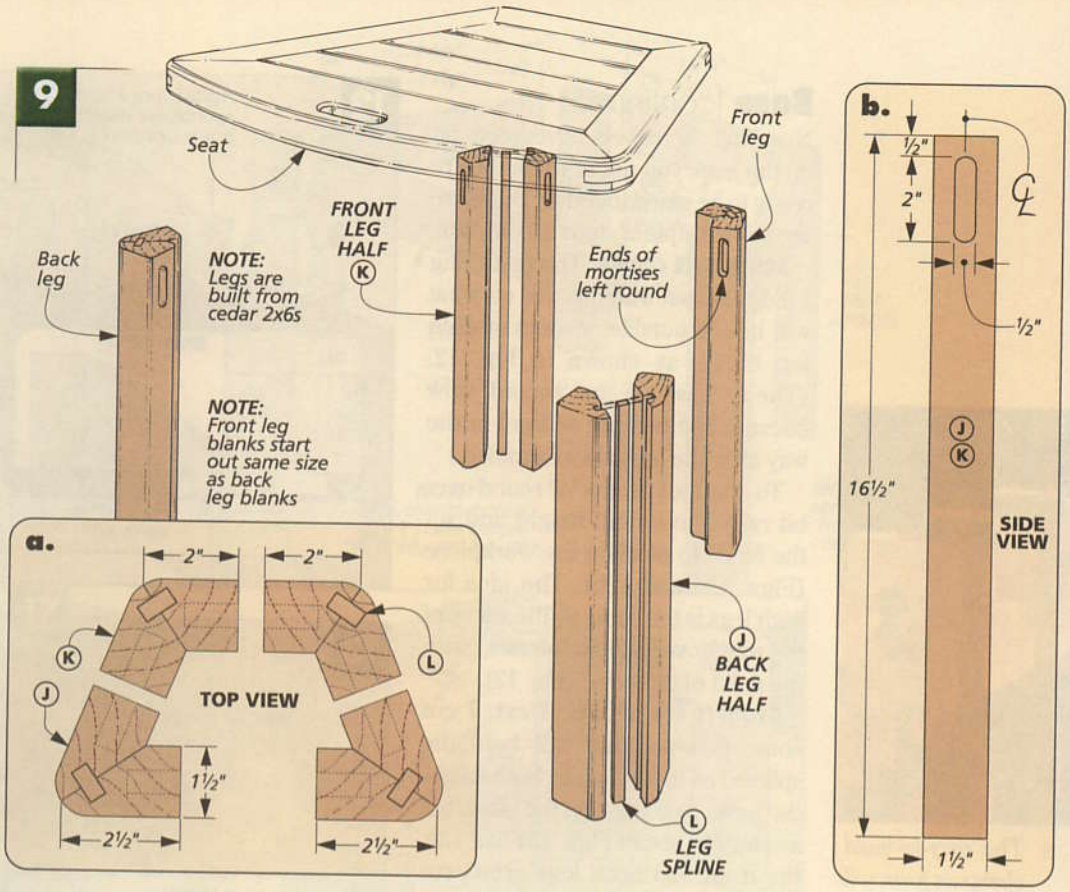

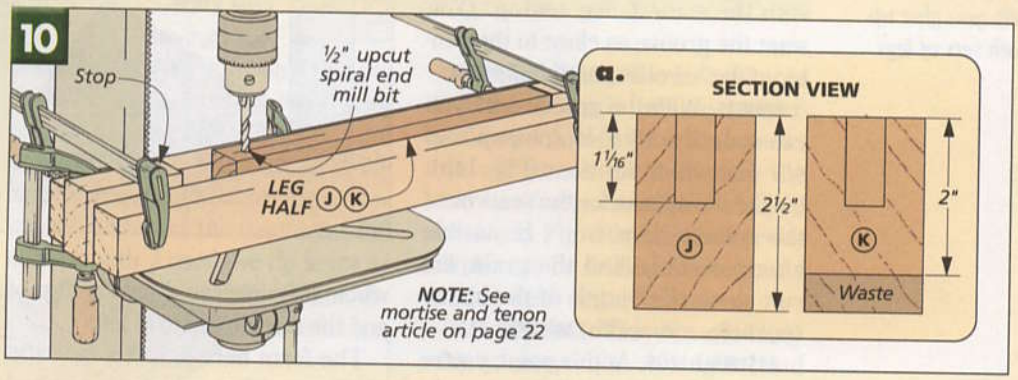

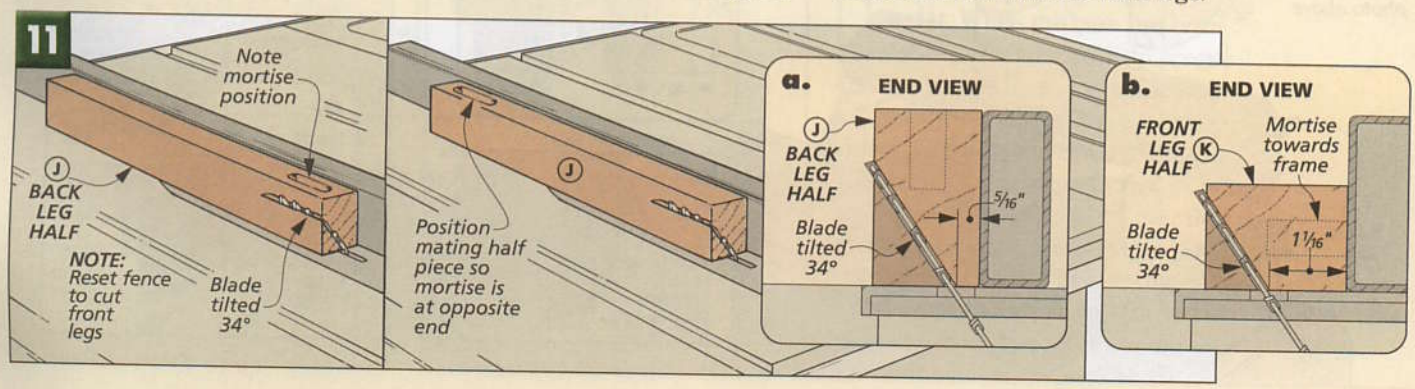

Base (continued)

Now that the bevels have been cut on the legs, you might think they're ready to be glued together. But there are still a couple of steps to complete.

ROUND OVER CORNER. The first thing I did was rout a roundover on what will be the outside corners of each leg blank, as shown in Fig. 12. (These have to be routed now because the bearing will get in the way after the legs are assembled.)

To do this, I used a 3/4" round-over bit raised to its full height and set the fence to position the workpiece (Figs. 12a and 12b). The idea for both legs is the same — the curve of the roundover should intersect with the point of the bevel (Fig. 12).

GROOVES FOR SPLINES. Next, I cut some grooves that will hold the splines, as in Fig. 13. In both cases, the bevel face rides on the table, but as you can see in Figs. 13a and 13b, the front and back legs aren't cut with the same fence setting. (You want the groove as close to the center of the bevel as possible.)

SPLINES. With the grooves cut, you can make the 16 1/2"-long *leg splines (L)* that will fit in them (Fig. 14b). Unlike the splines for the seat cover, the splines here won't be visible after assembly, and the grain will run along the length of the spline (not across its width, as before).

ASSEMBLE LEGS. At this point, you're ready to glue the leg halves together. And again, another quick clamping form makes this process a whole lot easier, as shown in Fig. 14 and the margin photo at left.

The form here is just a 3/4" MDF platform with a set of six notched blocks that create parallel edges so you can clamp the odd-shaped pieces together. Three blocks will be glued to the platform. Three will be set on top of the assembly.

The key is the notch in the clamping blocks. (I cut this notch in one block and then traced it on the other

▲ *This easy-to-build clamping form will help you glue up both sets of legs.*

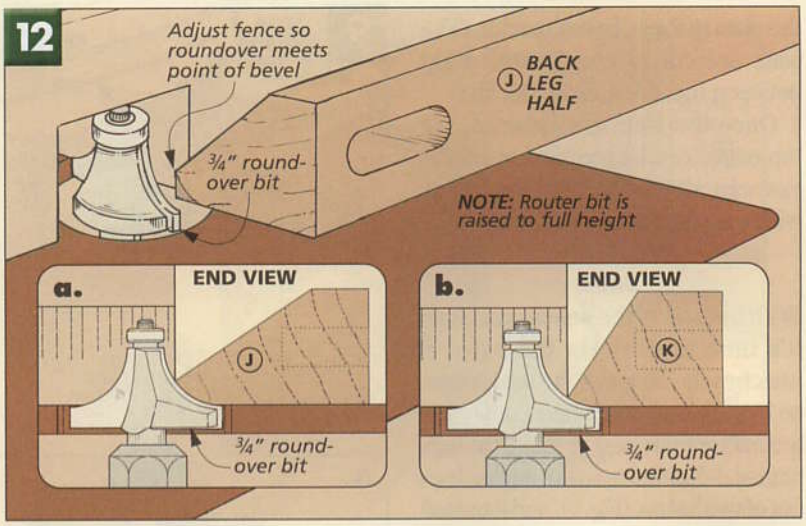

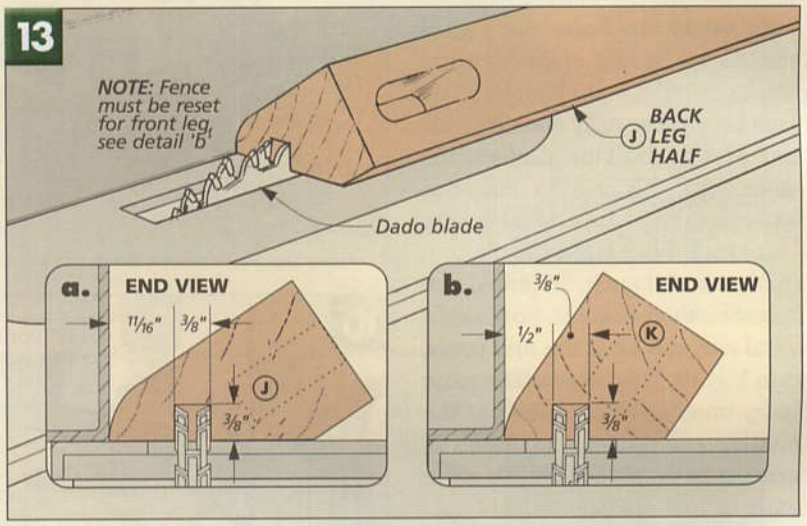

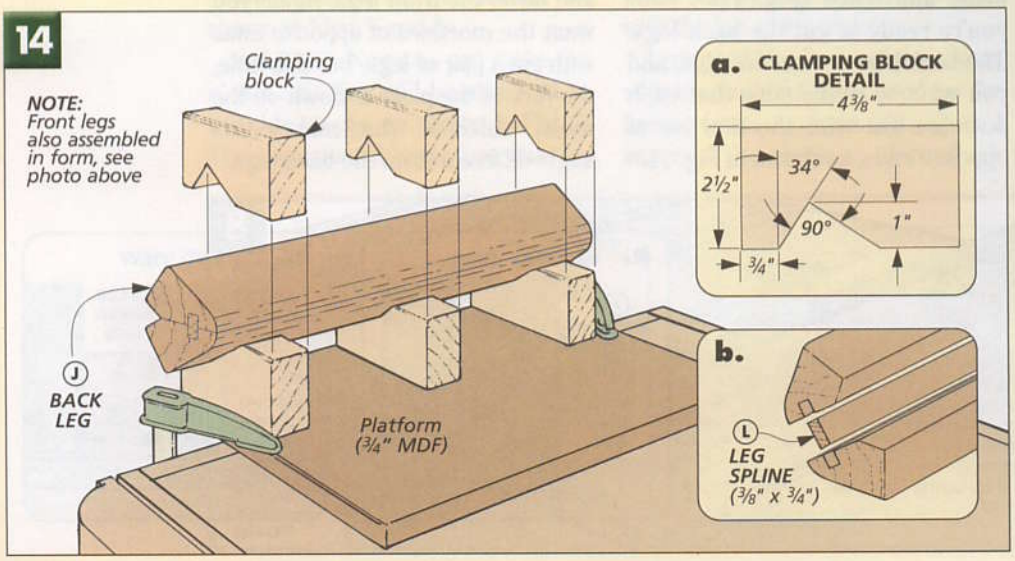

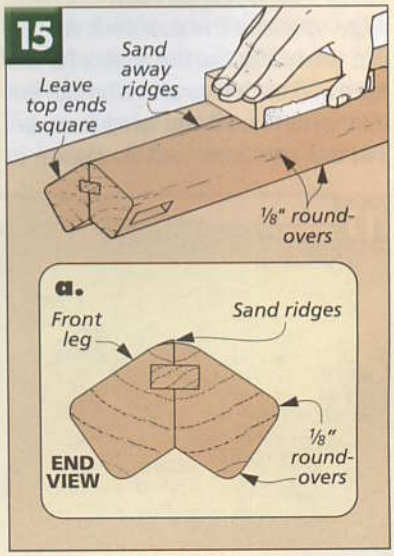

blocks.) To make it, just lay out a 34° angle on one edge as shown in Fig. 14a. Then use a square to draw a second line 90° to the first. Either a band saw or a jig saw will work for cutting away the waste, and there's no need to be too exact here.

With the form ready, the legs and splines can be glued together. And as before, the form works with both the front and back legs.

ROUND EDGES. When the glue has dried, I removed the legs and did some final shaping. You'll probably need to work on the outside corner of each leg (the one that was routed earlier). All this means is smoothing any ridges or shoulders on the roundover with a sanding block (or block plane), as shown in Fig. 15.

You'll also want to rout a slight roundover on the long edges and ends of the legs, as in Fig. 15a. (The top ends remain square.)

APRONS. With the legs complete, all that's left is to make the aprons that connect them. And since all the odd angles were "built into" the legs, the aprons are about as straightforward as they can get, as you can see in Fig. 16 above.

Like the seat slats, I used 5/4 decking (1" thick) and cut the *front (M)*, *back (N)*, and *side aprons (O)* to size, as in Fig. 16.

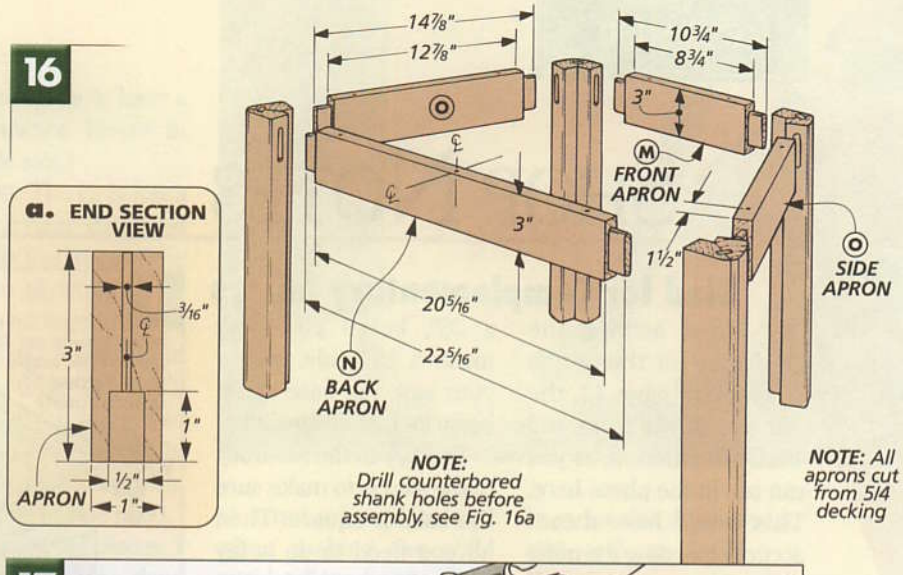

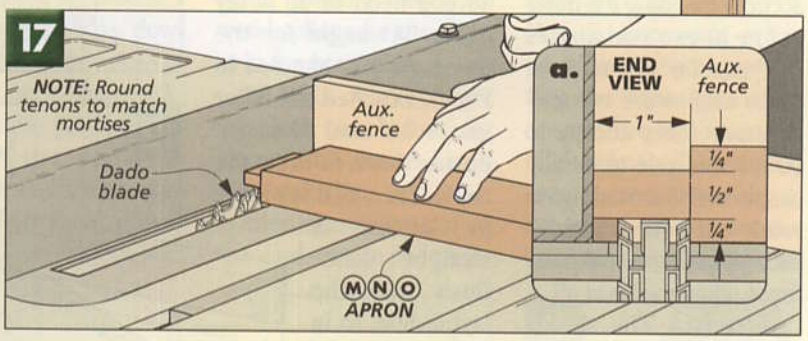

CUT TENONS. About the only thing to do to these pieces is cut the 1"-long tenons in the ends (Fig. 17). I did this at the table saw with an auxiliary fence attached to the miter gauge. And since the tenons are the same length, I used the rip fence as a stop (Fig. 17a).

MOUNTING HOLES. The last thing to do to the aprons is drill the counterbored shank holes for the screws that will attach the seat after the base has been assembled. As you can see in Fig. 16a, this is a pretty tall piece to be drilling through, so I did this work at the drill press.

BASE ASSEMBLY. This base is fairly easy to assemble. A single band clamp was all I used to pull everything tight, as in Fig. 18. But before you add glue, dry assemble the legs and aprons and see how well everything fits. There's probably at least one apron shoulder that will need to be sanded or pared slightly. Just keep in mind that the goal is to pull all the *outside* shoulders tight.

ADD SEAT. When the base has been assembled, all that's left is to screw the seat to the base. I found it easiest to do this with the bench upside down. This way, you can see that the overhang is the same at the front and sides. (The back hangs over the base quite a bit more, as in Fig. 18a.)

Now the bench is ready for the finish. And like the table, I used a spar urethane, but there's more on that in the article on page 34.

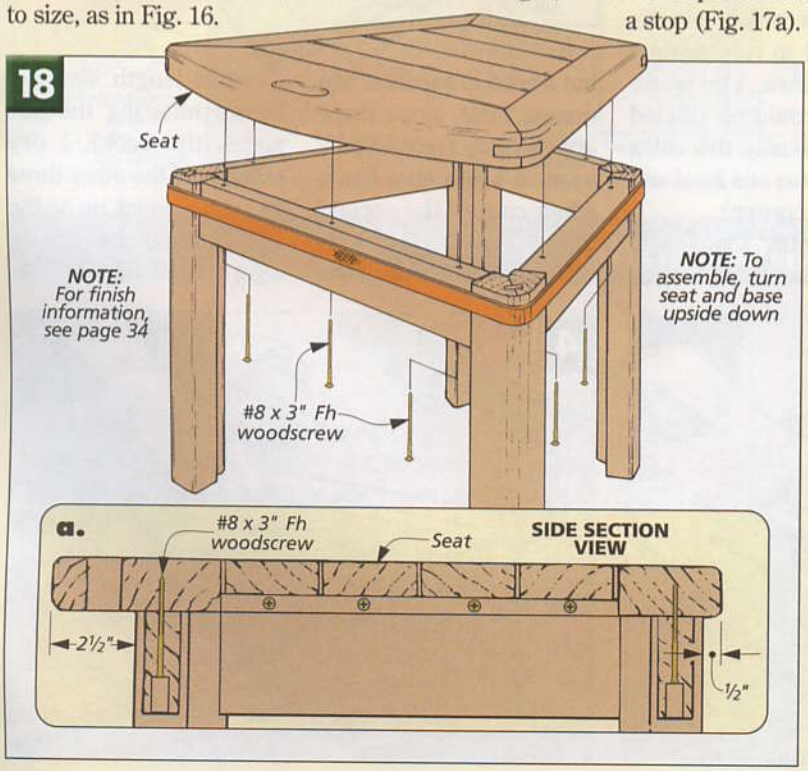

SHOP NOTES

▲ *To build the seat frames on the benches (page 12), you'll need to cut different angles at the front and back corners. But they can all be cut with one simple sled.*

Sled for Complementary Miters

When making the frame for the bench seats on page 12, the angles at the front and back are different, as you can see in the photo here. This would have meant accurately setting the miter gauge at two odd angles (34° and 56°). But since these angles are complementary (they add up to 90°), I was able to build a simple sled that would accurately cut both angles — without having to make any fence adjustments at all.

MITER SLED. The sled is just a large plywood base with an angled fence made of "two-by" material (Fig. 2). The base rides against the rip fence, and when its short edge is against the fence, it will cut the angle for the *front* corners of the frame (Fig. 3). With the long edge against the fence, it'll cut the angle for the *back* corners of the frame (Fig. 4).

Note: The base has to be big enough so the pieces will only stick past one edge. I made mine 20" x 26", but if you can't make a 26"-wide cut on your saw, the base could be an inch or so smaller.

The key to the accuracy of the sled is to make sure the base is square. Then all you need to do is lay out a 34° angle for the fence. As you can see in Fig. 1, I rotated my miter gauge 34° and flipped it upside down to draw the angle. Then all that's left is to attach a straight fence flush with the layout line, as in Fig. 2. (It can overhang the base on one end.)

LABEL EDGES & PIECES. When making the jig, it's important to label the edges of the base, as in Fig. 1. This way, you know which edge is supposed to ride against the rip fence. The workpieces should be labeled too (especially the sides as they have one front and one back corner.)

MITER PIECES. You already know how the jig works, but I need to mention two things. First, since there are two side pieces, you'll want to use a stop block when cutting the second miter (Fig. 4). This way, both sides will end up the same length. Second, before mitering the last piece (the back), I dry assembled the other three so I could sneak up on the final length of the back for a gap-free fit. W

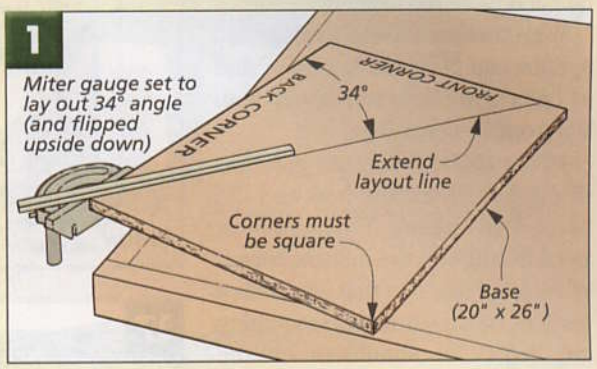

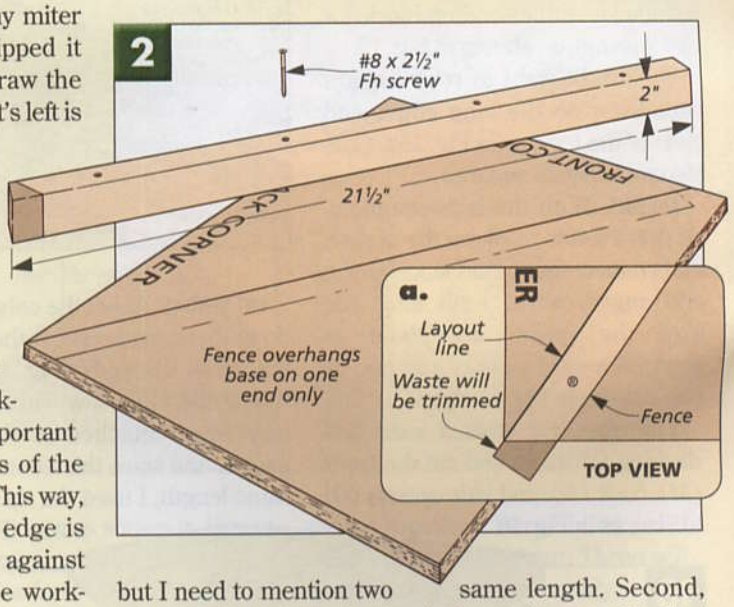

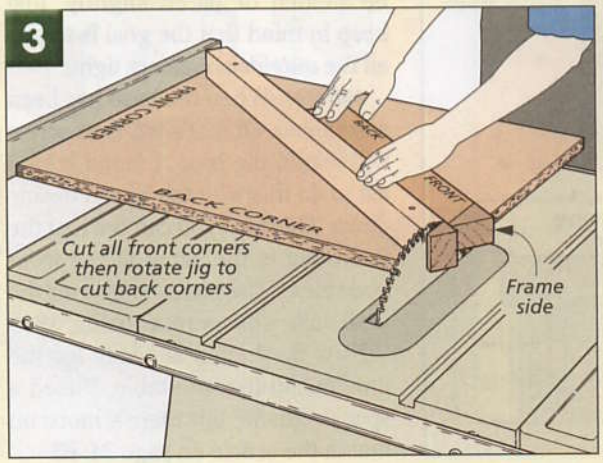

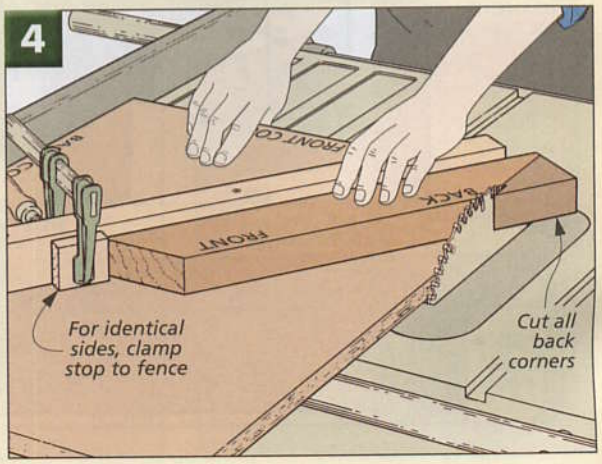

Splined Miter Jig

Adding splines is a great way to make a mitered frame stronger, and the splines actually help with the assembly because they keep the frame pieces aligned. But on the outdoor table and benches, the slots for the splines were too large to rout with a slot cutter bit. Instead, I needed to stand each piece on end and run it across the saw.

This procedure always makes me a little nervous, so to make it safer, I like to build a quick jig that supports the pieces while they're pushed across the dado blade, see photo. Plus, this jig works for all three angles in the table and bench projects. (It's also a good idea to have a zero-clearance insert in your table saw.)

CARRIAGE. The jig is just a simple carriage designed to straddle the fence of the saw. Two plywood faces are screwed together with a pair of spacers in between (Fig. 1). You'll want to size the spacers so the carriage rides smoothly over the rip fence (without any side-to-side play).

To support the pieces, I added three ¾"-dia. dowels. The two upper dowels help support the workpieces while you cut the slots on the ends, as shown in the photo and Fig. 2. The third dowel allows you to stand a board on end when making the solid wood splines for the slots, as in the box below.

CUT SLOTS. When cutting the slots, simply hold (or clamp) the frame blank against the jig.

After cutting the slot on one end, rotate the piece to cut a slot on the opposite end, as in Fig. 2. What's important when rotating the workpiece is that the same face stays against the jig. This way, all the slots will be sure to line up even if they're *not* centered exactly on the thickness of the pieces. W

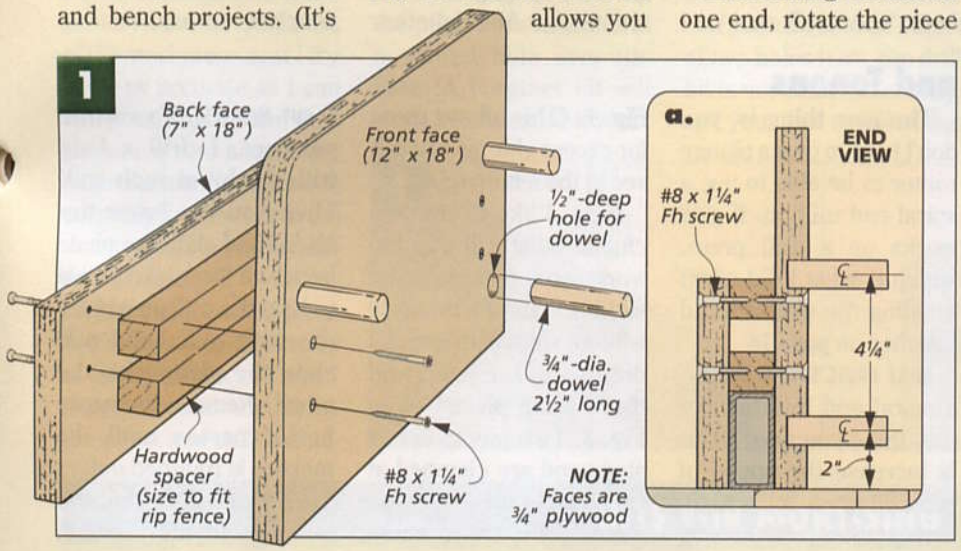

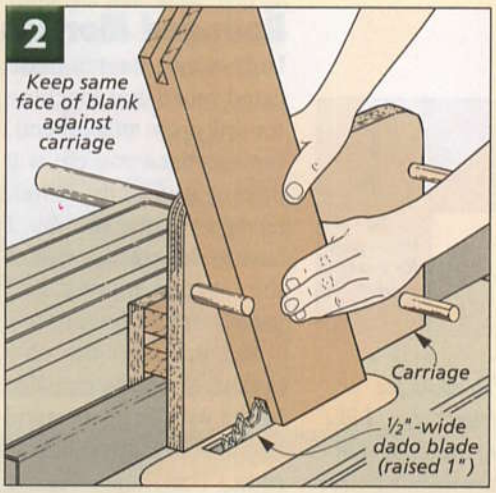

CUTTING SPLINES

For the strongest possible joint, the grain on the spline should run *across* the joint-line (refer to the photo on page 9). This is easy to do with the splined miter jig above.

The first step is to cut a pair of kerfs along the end of a board, as shown in the left drawing here. The blade should be raised a little more than the final width of the kerf. And the jig should be set away from the blade so the splines will fit snug in the slots. When both kerfs have been cut, the splines can be crosscut from the blanks, as in the right drawing.

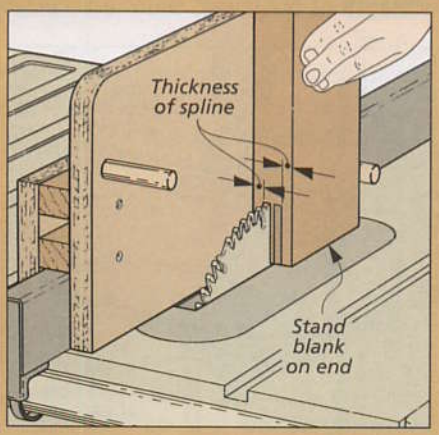

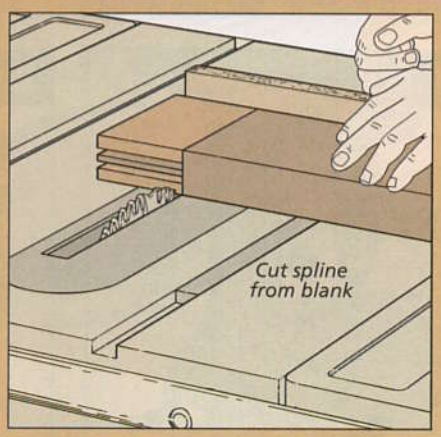

MORTISES & TENONS — SOLUTIONS & SHORTCUTS

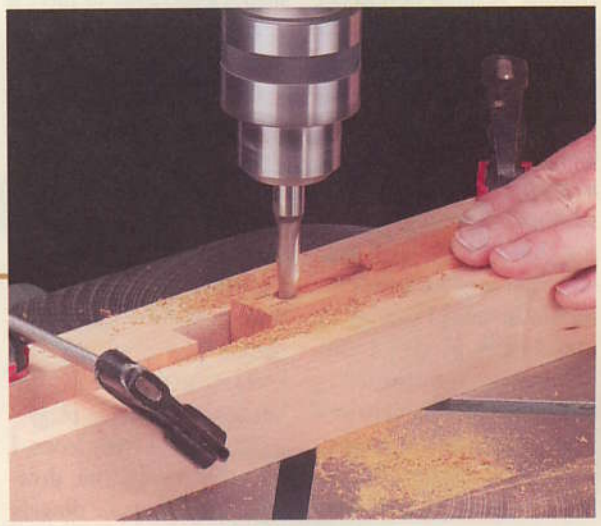

Mortise and tenon joints are the "meat and potatoes" of woodworking. They're strong, easy to make, and versatile — and most issues of *Woodsmith* feature at least one project that uses some form of this common woodworking joint.

As you might imagine, with having cut, fit, and assembled so many mortises and tenons, we've run into more than our share of problems (as well as a few mistakes that needed fixing). Some of the solutions meant using tools we wouldn't normally use. Others meant salvaging a piece by doing a little extra clean up work. But most of the time, the best "solution" was one that let us avoid the problem the next time around.

So here are some of our favorite solutions and shortcuts. And whether you've created a few mortise and tenon joints or a few dozen, I'm sure you'll find something to use on your next project.

Rounded Mortises and Tenons

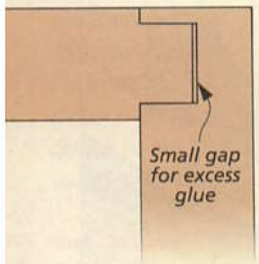

▲ *To allow for excess glue, I like to make the mortise slightly deeper than the length of the tenon.*

Unless you have a dedicated mortising machine (or drill press attachment), the mortises you cut will have round ends. When using a regular drill bit, I have to clean up the walls of the mortise anyway. So I usually square the ends too.

But this isn't the only option. Mortises can also be cut with an upcut spiral end mill bit. (See box at right.) This tool leaves the mortise walls smooth, and since I don't need to use my chisel, I leave the mortise ends round.

The nice thing is, you don't have to own a plunge router to be able to use a spiral end mill bit. It also works on a drill press, which is what I did when building the wrap-around benches on page 14.

DRILL PRESS SETUP. To use a spiral end mill bit, the first thing you need to do is increase the speed of the drill press to its highest setting (3000-5000 RPM). Then set the depth of the bit so it will stop slightly *deeper* than the length of the tenon, as in Fig. 1. (This allows room for excess glue, as you can see in the left margin.)

Next, I like to create a channel that will trap the workpieces so they can be slid back and forth easily without shifting in or out. I did this with a fence and three scrap pieces, as in Fig. 2. Two pieces act as stops and are clamped at each end of the drill press fence. The third scrap piece creates the channel. It's clamped to the front of the stops to hold the workpiece against the fence.

CUT MORTISE. To cut the mortises, I drill a hole with the bit at each end. Then you can lower the bit ¼" and slide the piece back and forth. (You have to hold the drill press handle with one hand and slide the piece with the other.) Remove the waste in ¼" passes until the mortise is roughed out.

Later, after cutting the tenon to fit the mortise, you can round over the edges quickly with a sanding block or a mill file, as shown in Fig. 3.

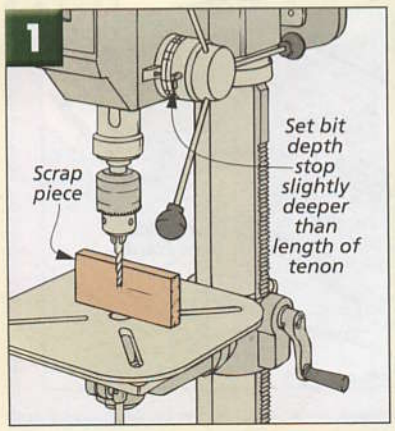

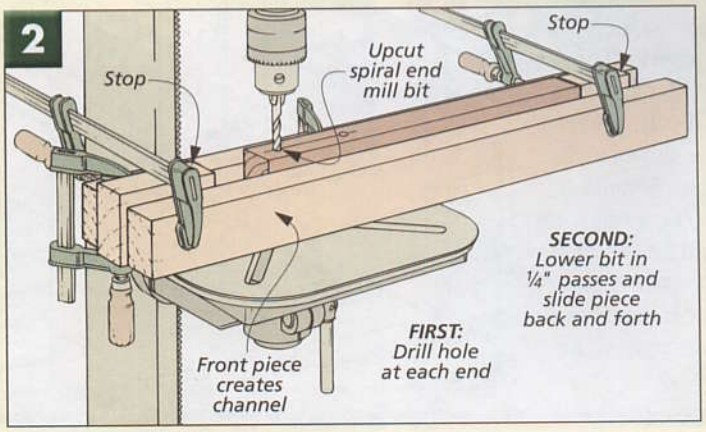

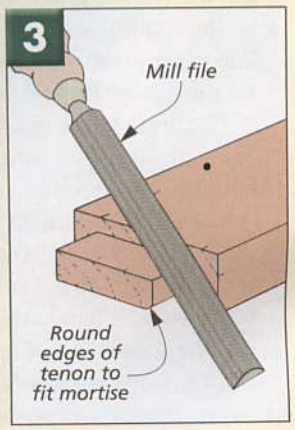

Large, Through Mortises

The base of the table on page 6 has through mortises, as shown in the margin photo. Here's a shortcut you can try the next time you have mortises like this to cut on a large workpiece.

Like a typical mortise, this one starts out at the drill press. But rather than drilling overlapping holes, drill a hole in each corner, as shown in Fig. 1 below.

Now you can remove the waste quickly by simply getting out your jig saw and cutting along the layout lines, as in Fig. 2.

At this point, you can square up the corners of the mortise. Or you can leave them round (like I did here) and then later round over the edges of the tenons with a mill file or sanding block, as in Fig. 3 on page 22.

▲ *This through mortise is no trouble at all to cut. All you need is a drill press and a jig saw.*

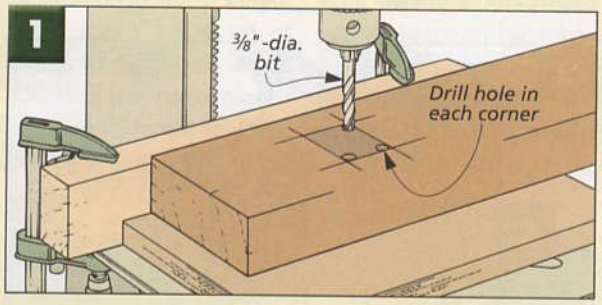

Centering the Mortise

Mortises are almost always centered on the thickness of the workpiece, and I try to be as accurate as I can when setting up the drill press. It's sure a lot easier to get the mating piece to fit correctly if you've taken the time to make sure the mortise is centered.

I start with a scrap piece that's the same thickness as the workpiece. Then I roughly center the bit on the piece and drill a shallow hole (Fig. 1). Now flip the piece around and drill a second hole over the first. (A Forstner bit will work best because it won't wander into the first hole.)

If you can see the edges of two holes here, the drill bit is *not* centered exactly, and you need to adjust the fence slightly. Then simply repeat this process until the two holes line up perfectly. Now you know the drill bit is centered.

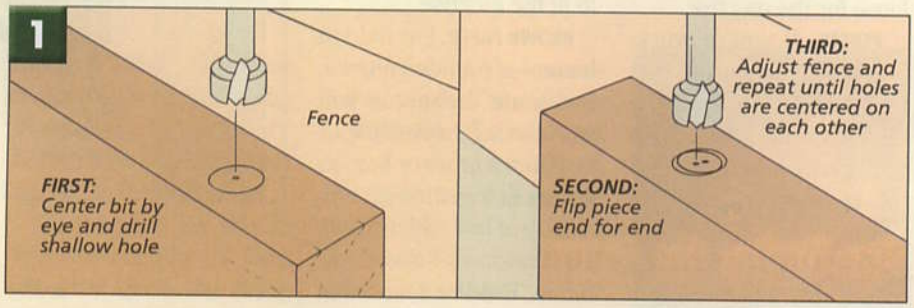

BITS FOR MORTISING

Using the right tools is just as important as using the right technique. Here are the bits we use to make mortises in our shop.

DRILL BITS. For most mortises, I will use either a brad point bit (top photo at right) or a Forstner bit (middle photo). Both have center points that keep the bit from wandering, but the Forstner is easily the best choice. With a brad point bit, you have to leave a tiny gap between each of the holes you drill, as shown in the top board at right.

On the other hand, the Forstner bit can drill overlapping holes. As you can see in the middle board, this means nearly all of the waste can be removed with the drill bit. So there's less clean-up work with the chisel.

SPIRAL END MILL BITS. The other bit I like to use is an upcut spiral end mill bit (bottom photo). Though technically it's a router bit, I've used it to cut mortises with a hand-held plunge router and in the drill press, as shown in Fig. 2 on page 22.

The flutes on an upcut bit are designed to pull the chips out of the mortise. And because it's run at a higher speed (up to 5000 RPM), the cheeks end up smooth, so you don't need to do any clean-up work at all.

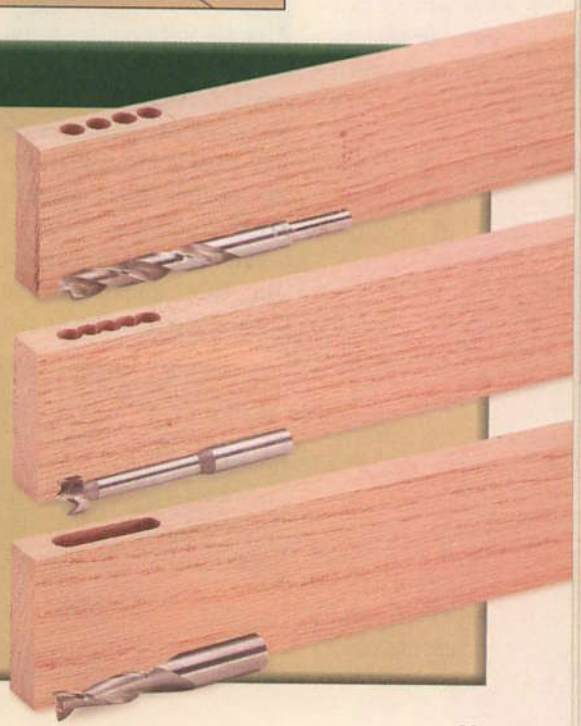

Multiple Mortises

The more mortises there are to cut, the more I want them to end up as identical as possible. If all the mortises are the same, then fitting the tenons later will be that much easier.

So when making multiple mortises, I make sure the shoulder cuts will be consistent by using a pair of small scrap blocks.

STOP BLOCK. The first block acts as a stop, as in Fig. 1. It's clamped to the fence to establish the shoulder that's *farthest* from the end of the board.

SPACER BLOCK. For the other shoulder of the mortise, I like to cut a spacer that slips between the stop and the end of the workpiece, as in Fig. 2.

Finding the length of this spacer is easy now that you have one of the holes drilled. Just measure from the *edge* of the hole to the *end* of the mortise and cut the spacer to this size. (This equals the mortise's length *minus* the diameter of the bit.)

After drilling the second shoulder, just remove the spacer and drill overlapping holes back to the first hole to remove as much waste as possible.

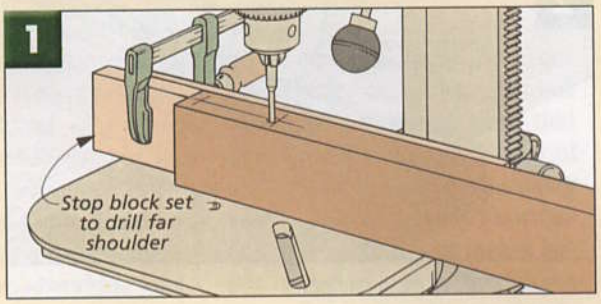

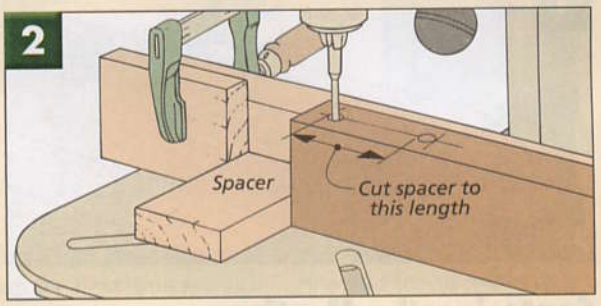

Loose Tenons

No matter how carefully you try to work, occasionally you're going to end up with a tenon that is too loose for the mortise.

VENEER. If you're working with a through tenon that will be visible (or the tenon is really loose), then you can enlarge it with thin pieces of veneer sliced from a piece of scrap, as you can see in Fig. 1. I glue the veneer to the tenon's cheeks and sand it to fit the mortise.

BROWN PAPER. For hidden tenons or rounded tenons, the same technique will work using brown paper cut from a grocery bag, as shown in Fig. 2.

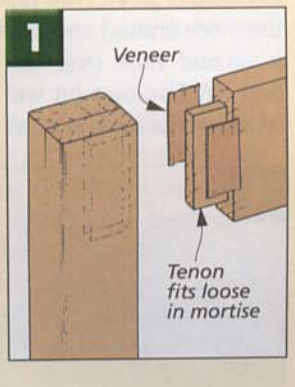

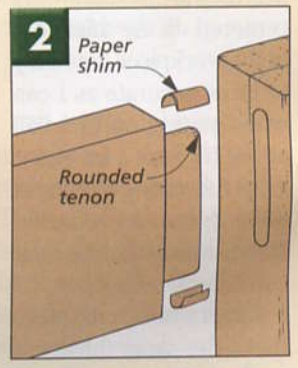

Fine-Tuning the Tenon

When dry assembling a mortise and tenon joint, you want to check that the workpieces end up flush. If they're not (as shown in the photo below), you'll need to fine-tune the tenon with a sharp chisel.

Technically, you could do this fine-tuning to either the mortise or the tenon. But I've found that paring away the long grain on a tenon is a whole lot easier than trying to chop through the end grain in a mortise.

What you want to do is remove enough of the top (or bottom) shoulder of the tenon to allow it to shift slightly up (or down) until it's flush with the mating piece, as in Fig. 1a. So before pulling the two pieces apart, I visually take note of the size of the shoulder. This is the amount of stock that has to be removed.

This is easy enough to do with a sharp chisel. Just clamp the piece in a vise and pare away small shavings, testing the fit often.

This fix will create a small gap in the mortise. But don't worry. The joint will still be plenty strong. But since there's a little "play" in the joint now, you'll need to take care that the two pieces end up flush during assembly.

If the rails and stiles of a frame don't flush out, it's easy to correct with a chisel. ►

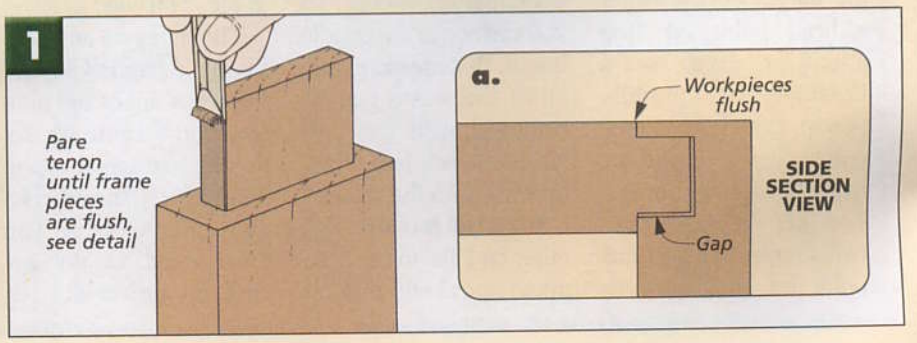

Using The Rip Fence as a Stop

Most times, when cutting tenons on the ends of a workpiece, I like to clamp a stop block to an auxiliary miter gauge fence, as you can see in Fig. 1 below.

But this isn't always the best solution. Some workpieces are too long to use with an auxiliary fence. Plus, there are a lot of times when I need to cut identical tenons on pieces that are different lengths. And if I were to use a stop block, I'd have to reset it several times to end up with the same size tenon on each piece.

In both of these situations, I find it's a lot easier to use the rip fence as a stop, as in Fig. 2. Safety Note: With a typical crosscut, you should *not* use the rip fence and auxiliary fence together — the waste piece can kick back at you. But here, you're not cutting *through* the piece, so you don't have to worry about kickback.

There are two things to keep in mind when using the rip fence as a stop. First, when positioning the fence, you'll need to measure to the far (left) side of the dado blade. And as you can see in Fig. 2, you still want the auxiliary fence to extend past the blade, so it will support the wood fibers at the back of the cut.

MINI-TENON

When making trial cuts for a tenon, I often cut a mini-tenon on the end of one of the pieces. This small tenon is long enough to let me check the fit. And if the mini-tenon ends up with a loose fit in the mortise, I can correct the setup and still use the workpiece — it's not going to affect the strength of the joint.

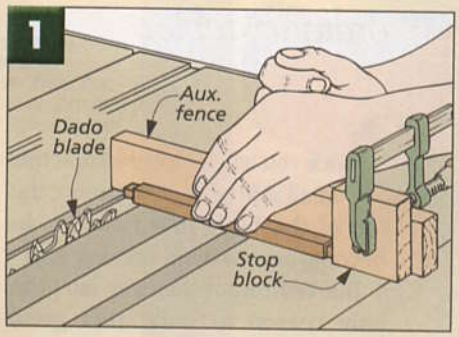

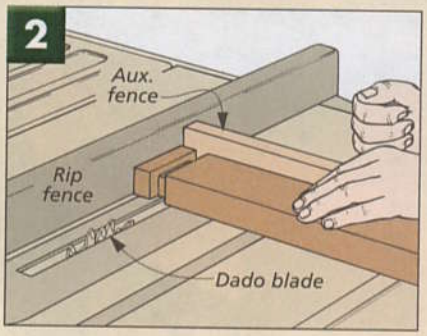

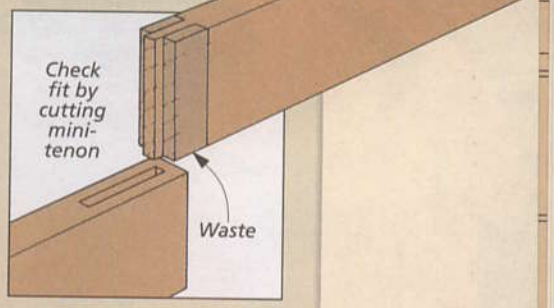

Stepped Shoulders

To cut tenons, I often lay the workpiece down on my table saw and make multiple passes over a dado blade, using the rip fence as a stop. This is a fast way to cut tenons, but you may find that the shoulders at the top and bottom of the tenon end up uneven, as in the photo at right.

The problem here isn't the procedure. Instead, it's usually a good indication that the rip fence isn't 90° to the table, as shown in Fig. 1 below. (Or, if you happen to be using a stop block on your auxiliary fence, then this stop isn't square to the table.)

The reason for this is that when cutting the long shoulders with the piece lying face down on the table, the piece contacts the fence near the bottom (Fig. 1). But as soon as the piece is set on edge, it contacts the rip fence higher up, as in Fig. 2. Here, the fence pushes the piece away from the blade creating a "stepped" shoulder.

SOLUTIONS. The best way to solve this is to adjust the rip fence so it's square to the table, and to do this, you'll want to check your owner's manual.

But there's a temporary solution for this problem. You can clamp or carpet tape a short strip to the fence, as in Fig. 3. (The strip should be just taller than the tenon shoulder.) Basically, this strip acts like a short fence, so the piece always contacts it at the same spot. (Or for yet another solution, check out the tip on page 4.)

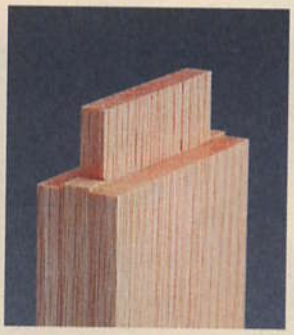

Stepped shoulders on a tenon indicate that it's time to give the rip fence a little tune-up.

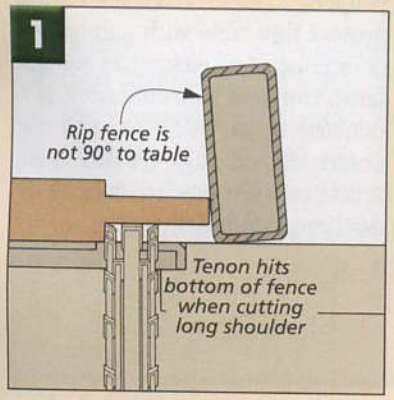

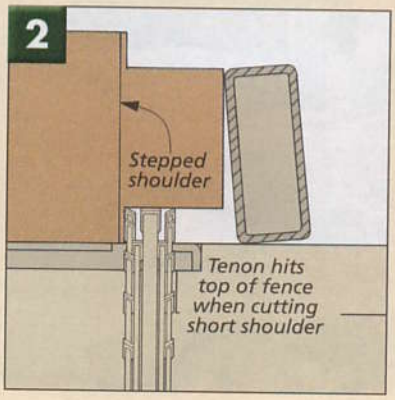

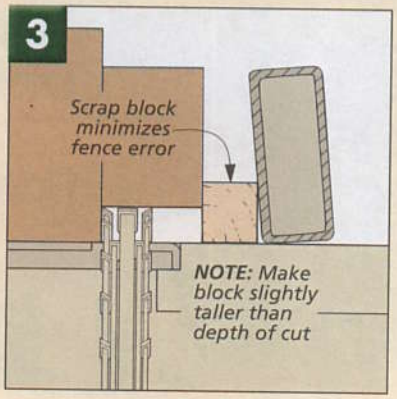

WEEKEND PROJECT

TRAY TABLE

At first glance, this may seem like another "garden-variety" outdoor table. But the handles are your first clue that this is no ordinary table.

Once you take a closer look at this small side table, you'll notice the top of the table lifts right off to become a convenient serving tray.

But the removable tray isn't the only reason to build this great weekend project.

To start with, the base of the table is constructed with mortise and tenon joinery. So it's built to last, even if it does get knocked around a bit in the yard. And just in case you've never tackled mortise and tenon joinery before, we've included a separate technique article on page 22 of this issue.

But probably one of the nicest features of this project is that you can easily build it in a weekend. All the parts for the table are cut from three cedar decking boards, which you should be able to find at most lumberyards or home centers.

FINISH. Even though it won't take you long to build, you'll still want to protect this table with a good outdoor finish. And picking an outdoor finish can be a little confusing, particularly if you've never used one before. So on page 34 there's an article on a few outdoor finishes we use here in our shop.

Serving your favorite summer beverage has never been easier. This small outdoor table doubles as a serving tray.

Construction Details

OVERALL DIMENSIONS:
22"W x 16"L x 17"H

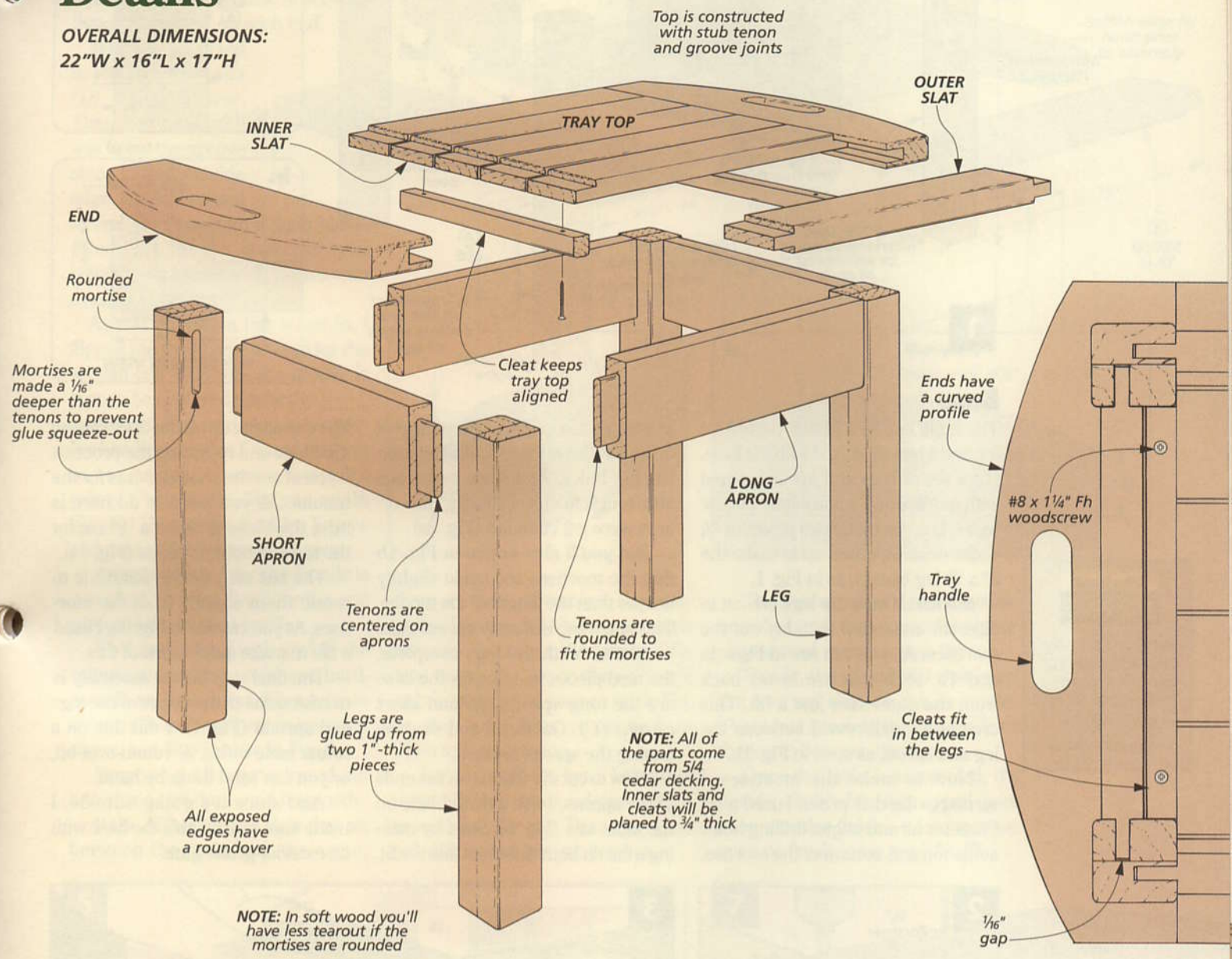

MATERIALS, SUPPLIES & CUTTING DIAGRAM

A	Legs (4)	2 x 2 - 16
B	Long Aprons (2)	1 x 3½ - 15
C	Short Aprons (2)	1 x 3½ - 12
D	Ends (2)	1 x 4½ - 16
E	Outer Slats (2)	1 x 2 9/16 - 15
F	Inner Slats (4)	¾ x 2 9/16 - 15
G	Cleats (2)	¾ x ¾ - 10

• (4) #8 x 1¼" Fh Woodscrews

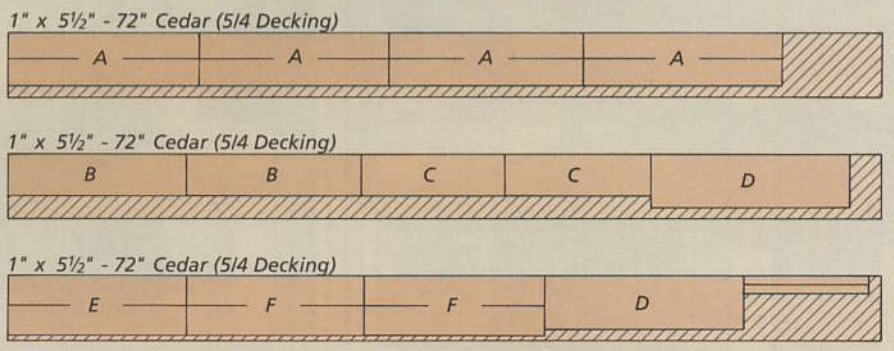

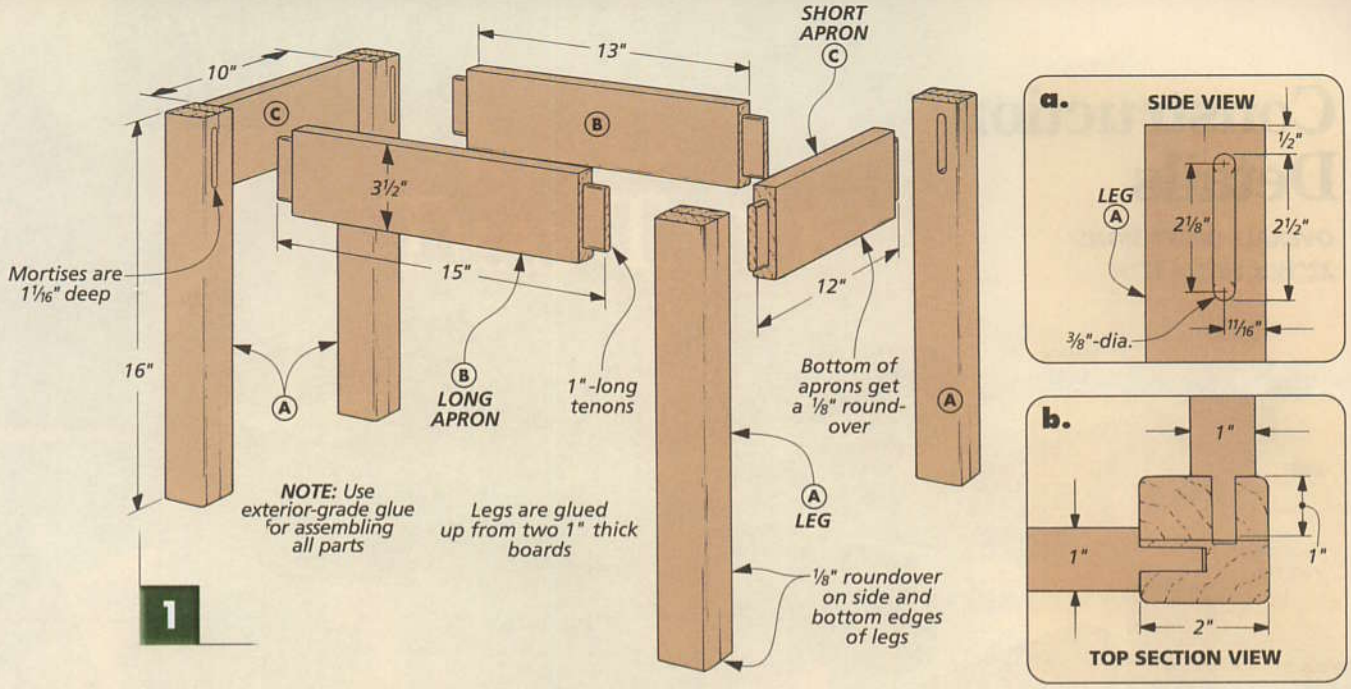

Base

The table consists of two parts — a top and a base. I started with the base. It's a set of legs and aprons joined with mortise and tenon joints. But the *legs (A)* are actually two pieces of 5/4 cedar decking glued up to make the 2" x 2" leg blanks, as in Fig. 1.

MORTISES. Once the legs are cut to size, the next step is to lay out the mortises. As you can see in Figs. 1a and 1b, each mortise is set back from the outer face just a bit. This creates a small reveal between the leg and apron, as seen in Fig. 1b.

Now to make the mortises, I turned to the drill press. I used a 3/8" Forstner bit and began drilling holes at the top and bottom of the mortise, as you can see in Fig. 2. Then the rest of the mortise is made by drilling overlapping holes. And since cedar is a little tough to chisel cleanly, the corners were left rounded (Fig. 2a).

But you'll also notice in Fig. 1b that the mortises are made slightly deeper than the length of the tenons. This small gap is for any excess glue.

TENONS. With the legs complete, the next pieces to make for the base are the *long aprons (B)* and *short aprons (C)*. Go ahead and start by cutting the aprons to size.

Now to cut the tenons on the ends of the aprons, I use a dado blade on the table saw (Fig. 3). Start by making a cut on both sides and test the fit. You can sneak up on the fit by raising the blade and repeating the process.

Next are the shoulder cuts for the tenons. All you need to do here is raise the blade to make a 1/2" cut for the top and bottom edges (Fig. 3a).

The last step for the tenons is to round them slightly to fit the mortises. As you can see in Fig. 3b, I used a file to make quick work of this.

The final step before assembly is to ease some of the edges of the legs and aprons (Fig. 1). I did this on a router table with a 1/8" round-over bit, or you can sand them by hand.

And since it's going outside, I made sure to assemble the base with an exterior-grade glue.

Woodsmith GO ON-LINE EXTRAS

For more on polyurethane glue, you can download a free article on our web site. Go to:

www.woodsmith.com

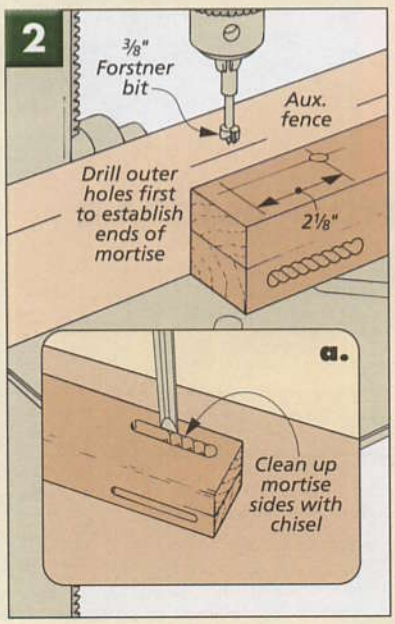

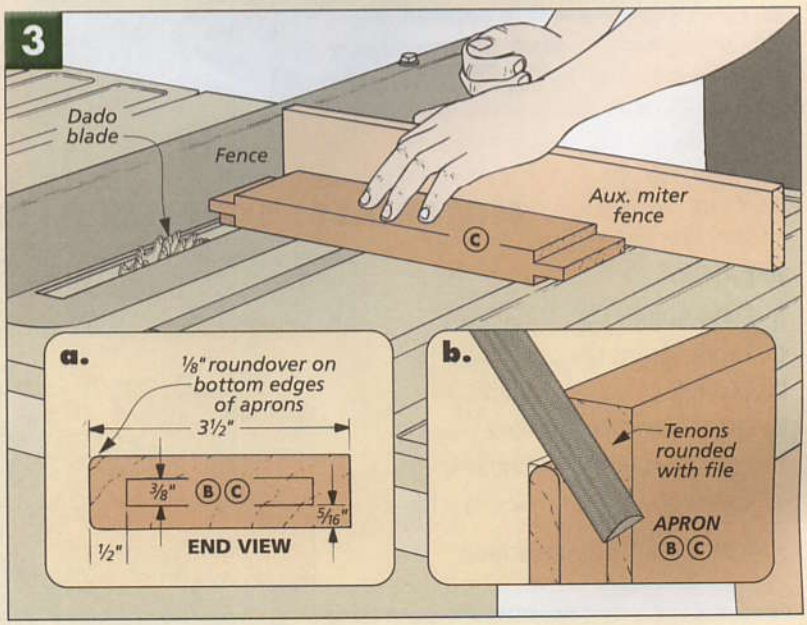

Tray Top

Once you've assembled the base, you can turn your attention to making the top tray. The top is made of six slats that are "capped" on each end.

GROOVES. I started by cutting the *ends (D)* to final size. Then the next step was to cut the groove along the inside edge. Again, I turned to the table saw with a dado blade. (Since the groove is narrow, you could also make several passes with a regular blade.)

As you can see in Fig. 5 and 5a, I flipped the workpiece around for the second cut. This way, the groove is sure to be centered perfectly.

HANDLES. The next step is to make the handle openings. I found the best way to make them was to first drill a pair of 1"-dia. holes, like you see in Fig. 4b. Then go back with a jig saw and cut out the waste in between.

CURVED PROFILE. After the handle is complete, the last detail for the end pieces is the curved profile.

To draw an arc, I took my 36" aluminum ruler (you could use hardboard) and some masking tape to create a "bow" that I use to trace out an arc, just like you see in Fig. 6.

Once you get the curve traced, cut it to shape and then sand it smooth.

SLATS. Although the slats that sit between the ends look the same, there are some differences. The *outer slats (E)* are a full 1" thick to match the ends. But to keep the weight of the tray down, the *inner slats (F)* are only 3/4" thick. And you can see in Fig. 4a, the outer slats are cut on *both* sides to form a tenon.

Just like with the base, I rounded over all the inner edges before assembling the top. Then glued the top with an exterior-grade glue.

The slats are aligned with the outer ones flush with the edge and the inner slats spaced evenly across the top.

Finally, the *cleats (G)* that keep the tray top aligned can be made. These just attach to the underside of the top in between the legs.

Once the table is assembled, it's time for a finish. I applied several coats of an exterior finish — for more on outdoor finishes see page 34.

4

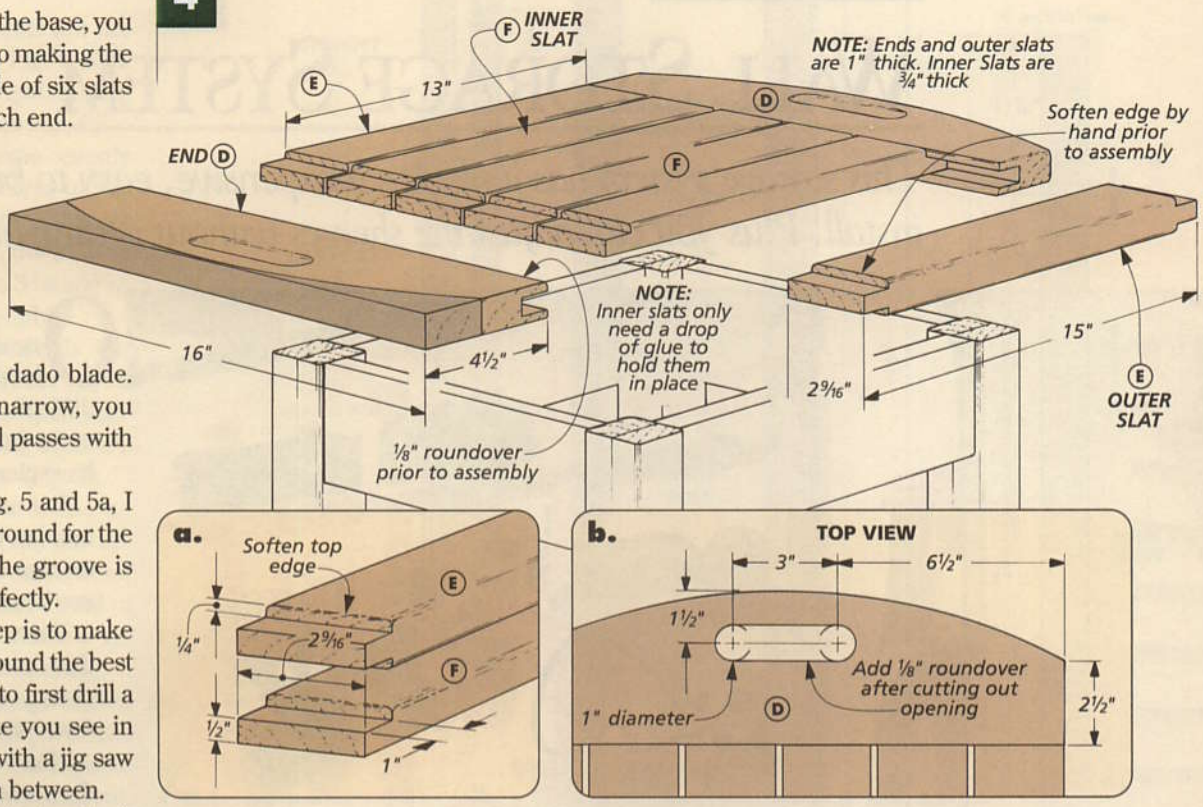

5

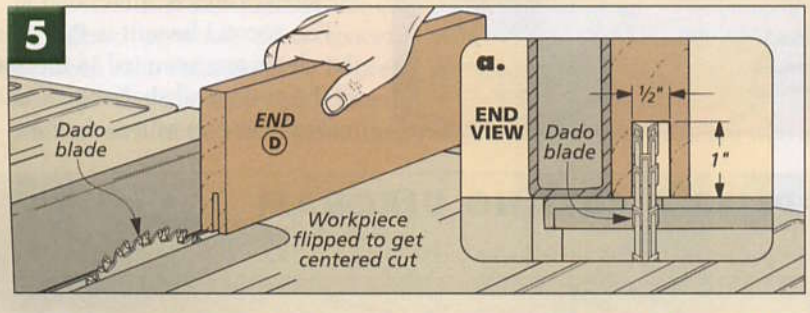

6

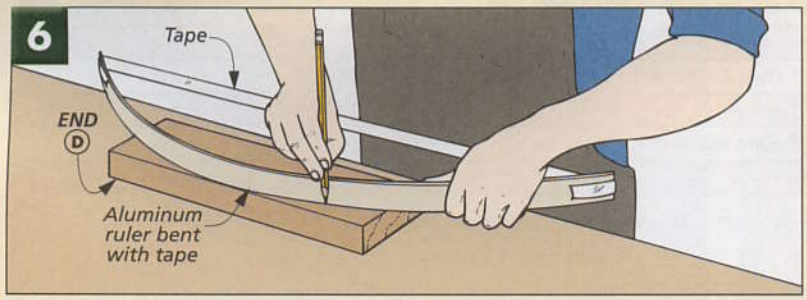

7

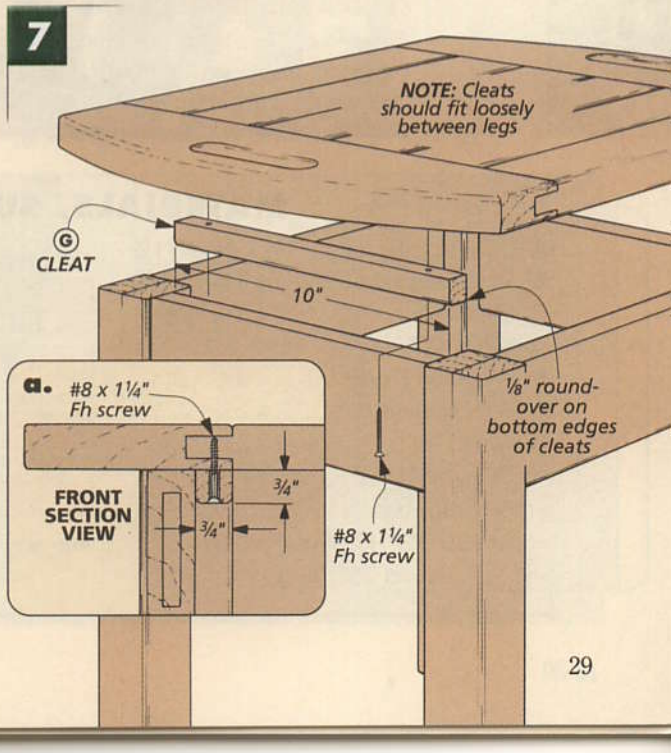

WALL STORAGE SYSTEM

This storage system has it all. It's inexpensive, easy to build, and easy to install. Plus you can adjust the shelves without getting out your toolbox.

Organizing your shop or garage doesn't have to be expensive or difficult. With ordinary 2x4s, 1x4s, and a half sheet of plywood, you'll have plenty of storage in no time.

Not only can this system be built in a day, but you can add to it as your storage needs grow — or reconfigure it easily as your needs change.

There are just three basic parts to this storage system: horizontal cleats, vertical posts, and three different styles of shelves.

The posts and shelves aren't all that unusual. The shelves fit into "slots" in the posts, but they're not level. They're tipped *up* slightly. This way, you don't have to worry about balls (and other round objects) rolling off the shelf. Gravity holds everything against the wall.

And the horizontal cleats? They do two things. First, they allow you to space the vertical posts as far apart as you want them. This means you don't have to find a stud to screw into. (I spaced my posts so the shelves ended up 24" long.)

The second benefit is that when the cleats are mounted to the wall, all the posts (and shelves) will automatically line up with each other.

MATERIALS, SUPPLIES & CUTTING DIAGRAM

A	Uprights (4)	1½ x 3½ - 71¼
B	Shelf Supports (36)	¾ x 3½ - 11¼
C	Cleats (2)	¾ x 3⅛ - 96
D	Shelves (7)	¾ ply. - 10 x 24
E	Peg Shelf Fronts (2)	¾ x 3½ - 24
F	Peg Shelf Bases (2)	¾ x 2¾ - 22½
G	Braces (2)	¾ x 2¾ - 2¾
H	Tool Shelf (1)	¾ ply. - 10 x 24

- (158) #8 x 1¼" Fh Woodscrews
- (24) #8 x 3½" Fh Woodscrews
- ½" dia. Dowel 26" long

1½" x 3½" - 96" (Four Boards @ 3.5 Bd. Ft. Each)

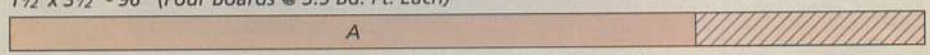

¾" x 3½" - 96" (Six Boards @ 1.75 Bd. Ft. Each)

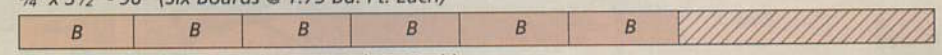

¾" x 3½" - 96" (Two Boards @ 1.75 Bd. Ft. Each)

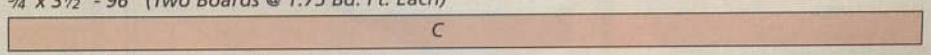

¾" x 3½" - 96" (One Board @ 1.75 Bd. Ft.)

Also needed: ¾" - 48" x 48" Plywood (makes eight shelves)

Posts

At the heart of this project are the posts. As you can see in Fig. 1, each one consists of a 2x4 *upright (A)* and a series of 1x4 *shelf supports (B)*.

These supports create evenly spaced slots for the shelves to slip into. And to secure the shelves (without any fasteners), the ends of the supports are cut at a 3° angle so the shelves tilt upward slightly.

CUTTING THE SUPPORTS. With the uprights cut to length (71¼"), you can begin work on the shelf supports. I used an extra-long auxiliary fence on the miter gauge (Fig. 2).

You want the supports to end up identical so all the slots will line up. To do this, I clamped a stop block on the rip fence a few inches in front of the blade. This way, there's no chance of the workpiece binding.

Now, with the miter gauge angled 3°, you can easily cut multiple pieces by repositioning the workpiece against the stop block after each cut.

Note: The top and bottom shelf supports have one square end. So I use the first and last pieces cut from each board for the top and bottom.

ATTACH THE SUPPORTS. Once you have all the shelf supports cut, you can screw them to the uprights, like you see in Fig. 3. Start at one end and work your way down.

What you want is for the fit to be just loose enough so the shelves can slide in (and out) easily. And I found it a good idea to use a small piece of ¾" scrap plywood as a spacer between each shelf support. To prevent splitting the supports, I placed the screws about ¾" from the edges, as shown in Figs. 1a and 1b.

Also, since the inner posts have supports on *both* sides, make sure you orient the supports the same. This way, you won't mistakenly have shelves angled down.

You'll also notice that the top and bottom supports are attached with a different pattern of screws (Fig. 1a). That's because the final step is to trim the tops of the posts. It's just a small 45° cut on the top and bottom of the post, as you can see in Fig. 3.

I did this at the table saw, but you could easily cut the corners with a jig saw or even with a hand saw.

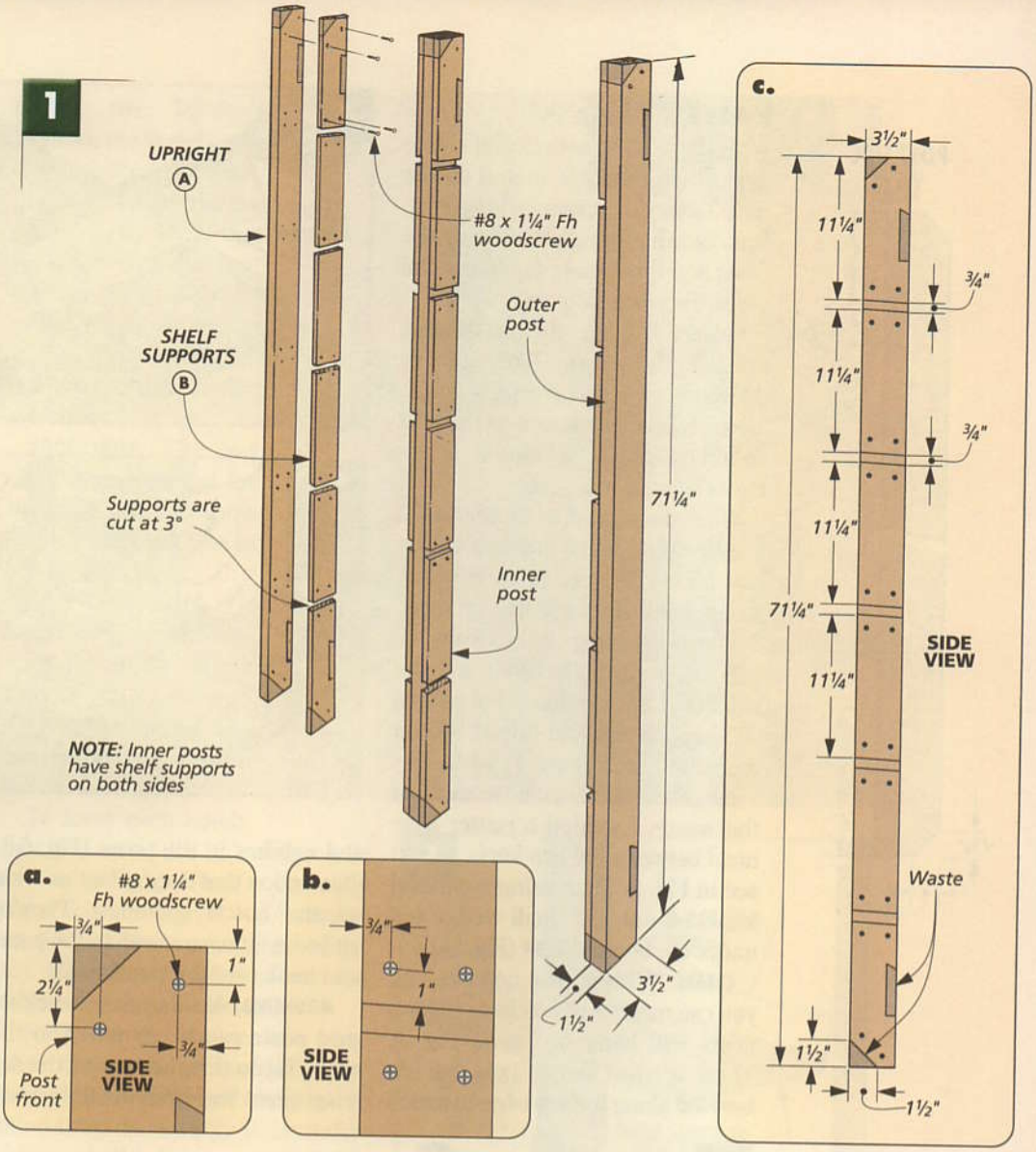

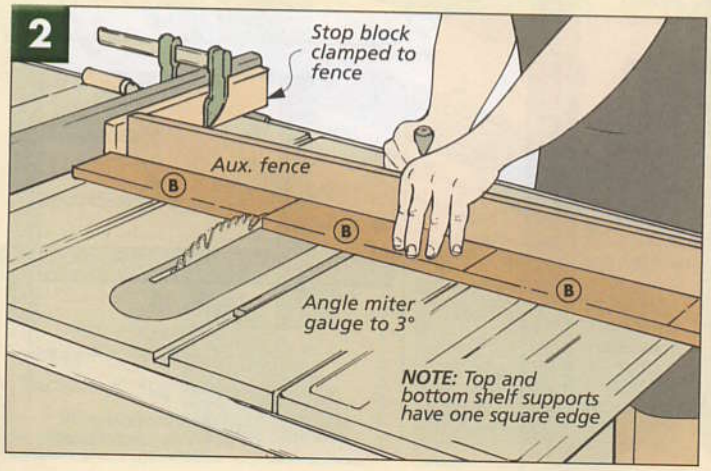

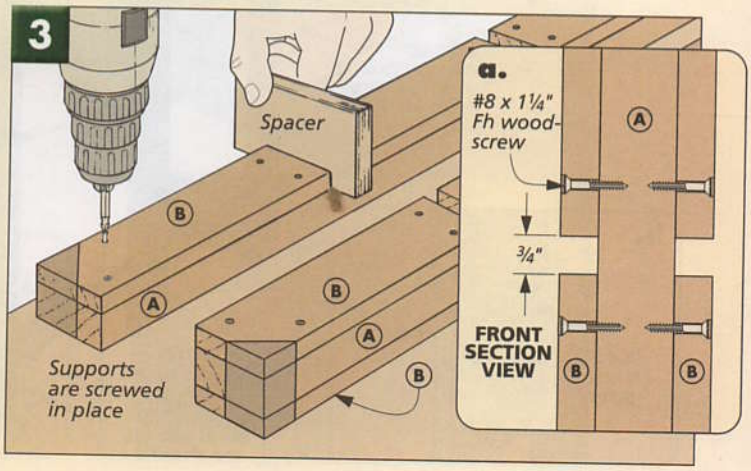

Posts (continued)

With the posts assembled, it's time to get them ready to mount on the wall. To form a strong locking joint, I cut some half-dovetail notches in the posts and then made the horizontal cleats the posts hang on.

NOTCHES. Don't let the half-dovetail notches throw you. The fit here doesn't have to be precise — you're basically creating a hook on the post so it'll be easy to position it on the cleats later, as in Fig. 6a.

What does need to be precise is the *location* of the notches on the posts. They all need to be identical, so the shelf slots will line up when the posts are hung on the cleats.

So after carefully laying out the notches, I cut *two* kerfs for each: a 60° kerf on top and one at 90° on the bottom, as in Figs. 4 and 4a.

Next to quickly remove most of the waste, I guided a router freehand between the two kerfs, as you see in Fig. 5. Then using a chisel, I knocked out the small wedge left under the beveled kerf (Fig. 5a).

CLEATS. With all the notches cut, you can make the two *cleats (C)* the posts will hang on, as in Fig. 6. These are just simple 1x4s that are beveled along the *top* edge to match the notches in the posts (Fig. 6a). But notice that they're not as wide as the notch openings. They're ripped a little narrower so the posts can hook over the cleats easily.

MOUNTING. At this point, the cleats and posts can be mounted to the wall. To do this, I screwed the top cleat seven feet from the floor, making sure it was level and that I was hitting wall studs (Fig. 6a).

The bottom cleat is mounted the same way, but you need to take extra care that the point-to-point distance between the cleats matches the point-to-point distance between the notches. Otherwise, the posts will rest on only one cleat.

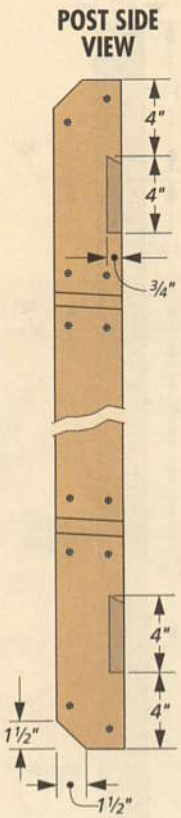

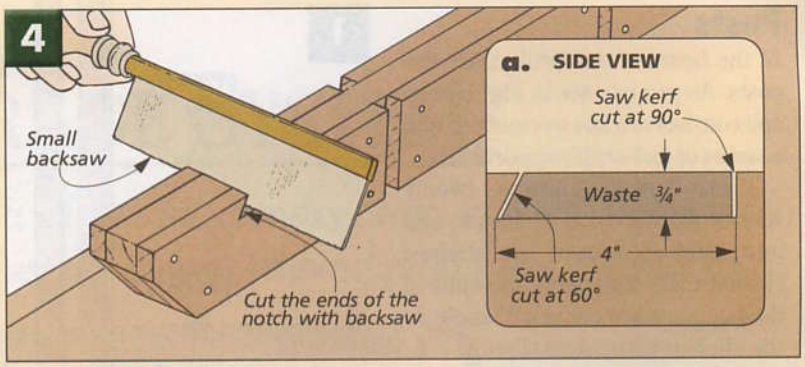

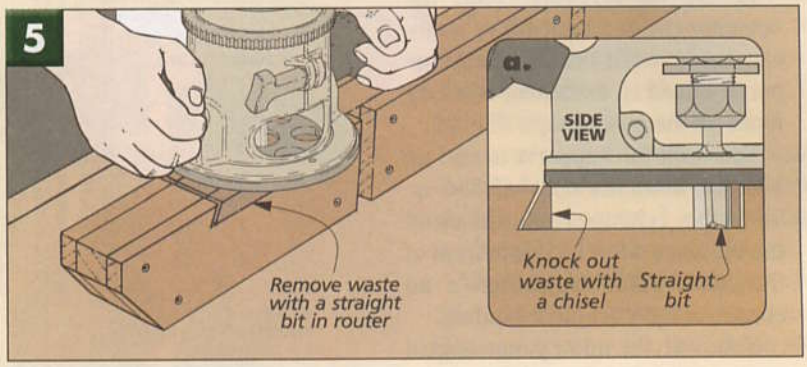

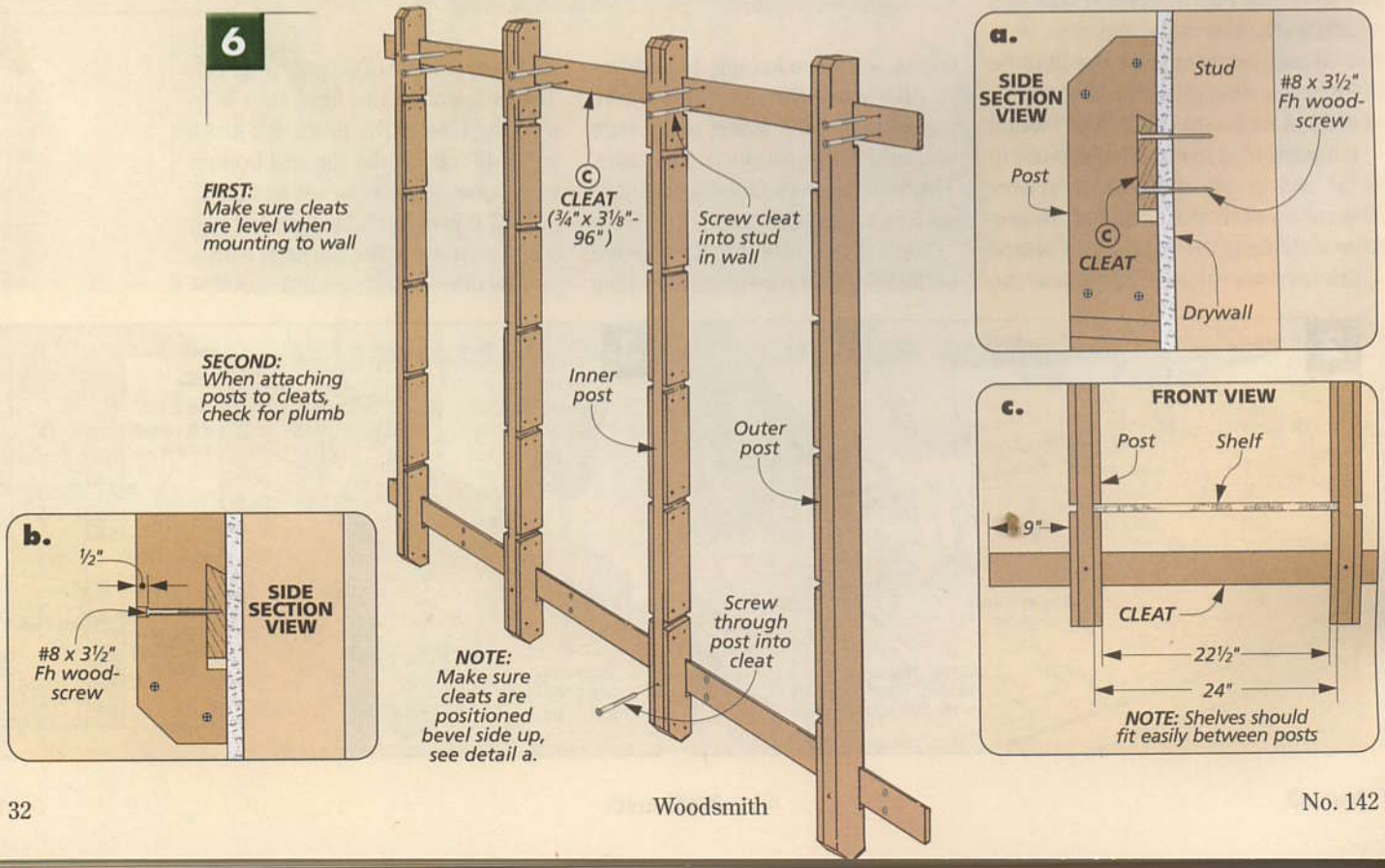

With the cleats in place, you can attach the posts (Fig. 6b). I spaced the posts 22½" apart, checking for plumb. This spacing will allow the 24"-wide shelves to fit between the supports, as you can see in Fig. 6c.

SHELVES

The last step is to make the shelves. To store a variety of items, I came up with three shelf designs. And all three are sized to slip easily into the slots in the posts. This way, rearranging the shelves won't be a hassle.

PLAIN SHELVES. The first set of *shelves (D)* are plain ¾" plywood panels cut to fit the slots, as in Fig. 7. (To slide easily, they'll need to be slightly shorter than 24".) Then I cut a radius on the front corners and eased the edges with sandpaper.

PEG SHELVES. The second shelf I designed ends up being a small bin with a row of pegs along the front, as shown in Fig. 8. This will allow you to hang up a shop apron, ball caps, or an extension cord. Plus, as you can see in the photo at right, the bin is great for storing small items like cans or spray bottles.

The peg shelves start out as a *peg shelf base (F)* that's cut to fit in the slots, as in Fig. 8. It's screwed to a *shelf front (E)* that's sized to fit between the *faces* of the posts. But before screwing the two together, I drilled five ½"-deep holes for the dowel pegs.

To reinforce the front, I added a single triangular *brace (G)*. (Note that it's screwed to the front through the hole for the center dowel, as shown in Fig. 8a.) Finally, you can cut the dowels and glue them in place.

TOOL SHELF. The last shelf was designed for hanging handled tools or baseball bats, like in the photo at right.

The *tool shelf (H)* starts out just like the ones you made earlier. But as you can see in Fig. 9, this panel has some deep notches cut in its front edge.

To form each notch, first drill a 1½"-dia. hole with a hole saw, as in Fig. 9. Then to complete the notch, you can cut out the waste on the band saw or a jig saw (Fig. 9a). Now all that's left is to sand the edges of each notch smooth.

Now that the shelves are complete, they can be arranged however you'd like. And if you change your mind later, don't worry — reconfiguring a shelf is just a matter of sliding it out and repositioning it.

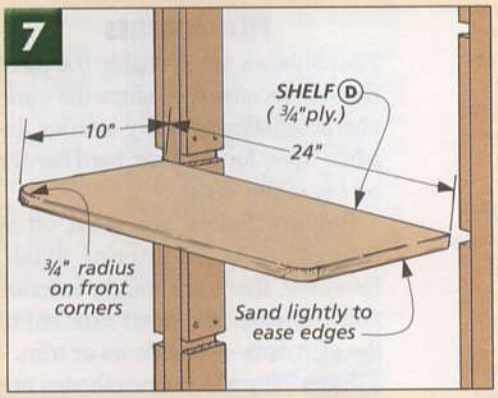

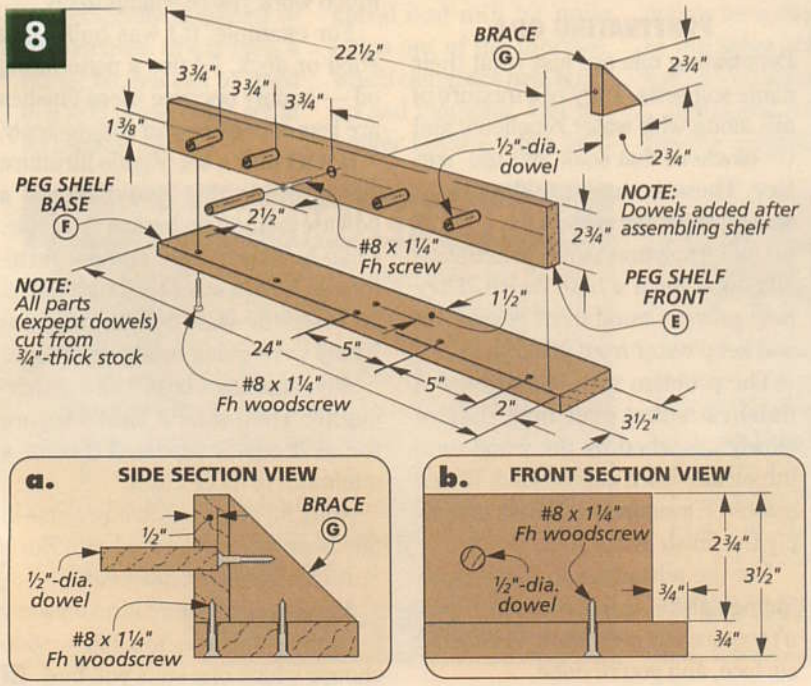

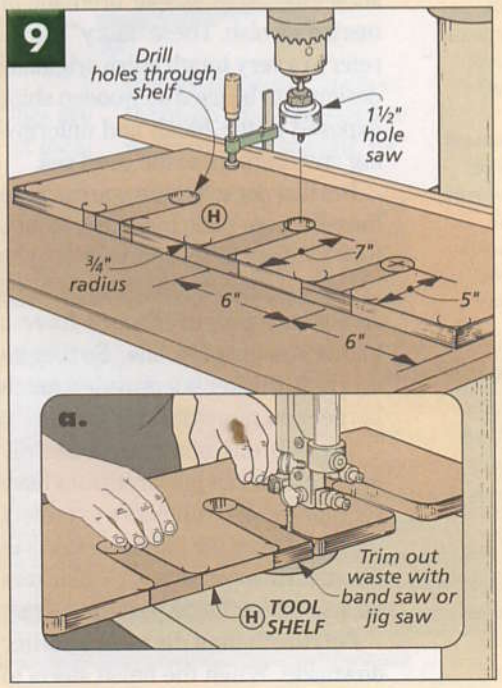

OUTDOOR FINISHES

Wondering what outdoor finish to use? If you're going to build an outdoor project and want it to last, here are a couple finishes we use in our shop.

Outdoor finishes have a pretty tough job. Not only do they have to protect wood from rain and sunlight — but they also have to deal with extreme temperature changes.

To accomplish all this *and* let the beauty of the wood show, there are a few different *clear* outdoor finishes.

They can be separated into two categories: film finishes and penetrating oils. They do the same basic job but in two very different ways.

FILM FINISHES

Film finishes are probably the most familiar because they share the same characteristics as many interior finishes. They form a clear, hard barrier on *top* of the wood.

Polyurethanes are most often thought of as an interior finish. However, there are tough, exterior polyurethanes for wood exposed to the elements — like doors or trim.

Exterior-grade polyurethanes are sometimes sold as spar urethane or marine varnish. These "fancy" names refer to a very tough finish originally designed to be used on wooden ships exposed to the harsh and unforgiving environment of the open sea.

But that doesn't mean you can't use them on your patio furniture. In fact, they're ideal for this purpose.

Unlike interior polyurethanes, exterior grade polyurethanes have a higher amount of "solids." So they go on a little thicker but provide a much harder and more durable finish.

There is one other important difference. Exterior polyurethanes have UV (ultra-violet) inhibitors to protect the wood from the harmful effects of the sun. However, these UV blockers do lose their effectiveness over time.

Polyurethanes do have another downside. When the finish starts to wear, you'll need to sand down the entire surface to give it some "tooth" before you apply another coat. The advantage is you'll only have to do this once every few years.

PENETRATING OILS

Penetrating oils are just what their name suggests. They're a mixture of oils along with water repellents and UV blockers that soak into the surface. These are often sold as "deck stains" or "water sealers."

Unlike polyurethanes, penetrating oils don't form a hard finish. They help prevent wood from drying out and keep water from soaking in.

The problem with these types of finishes is that over time they're slowly absorbed by the wood until the surface is left unprotected. Which means on average, you'll have to reapply the finish every year.

But the advantage to these penetrating finishes is that recoating doesn't require any prep work. Recoat the surface, and you're done.

THE RIGHT FINISH

So how do you choose the right outdoor finish for your project? It really depends on how big and what type of project you're building and how much work you're willing to do.

For example, if I was building a shed or deck, I'd use a penetrating oil — mainly because these finishes are less expensive and easy to apply.

But if I built a set of patio furniture (like I did in this issue) I'd use a polyurethane. The reason is simple. I like furniture, even outdoor furniture, to have a smooth, tough finish. So I used the same finishing steps as if they were going inside my house.

After applying a coat, let it dry thoroughly. Then sand it lightly before the next coat. I repeated this for a minimum of three coats.

Note: All of the outdoor projects in this issue were all treated with *Zar's Satin Exterior Polyurethane.*

As you can see there is no mystery to exterior finishes. You just need to choose which one suits you best. W

SOURCES

Outdoor Materials

When you build a project that spends most of its time outdoors, it's a good idea to choose the materials carefully. Here are some things to keep in mind for the projects featured in this issue.

WOODS. There are a lot of woods you can build with. As far as decay resistance goes redwood, teak, mahogany, cypress, and white oak are all good choices — but they can also be expensive (and not all are commonly available). So for our projects, we chose another decay-resistant wood: Western red cedar.

One thing to keep in mind is that cedar is sold as dimensional lumber. So the 2x6 boards we used were around 1½" x 5½". And the 5/4 decking was close to 1" thick.

So why mention this? When building furniture projects, some pieces (like the cleats on the top and seat frames of the table and benches) will need to be sized based on the *actual* thickness of the stock. And it's always a good idea to double check the sizes of the pieces to make sure they'll fit properly.

GLUES. Another consideration for outdoor projects is the glue you'll use. The yellow and white glues you typically build with aren't intended for outdoor applications. But there are a few other options to consider.

For the projects in this issue, I decided to use a glue I've had good results with in the past: polyurethane glue. This glue reacts to moisture, so it works differently than the glues you're used to. (For more on polyurethane glue, check out the free article in the Online Extras section of our web site.)

A couple other good (and less expensive) choices for an outdoor project would be to use a yellow glue formulated for outdoor use (such as *Franklin's* Titebond II) or a plastic resin glue. (Plastic resins come in powder form and have to be mixed with water.)

SCREWS. Like the glue, you also want to be careful about the kinds of screws you use. There aren't many screws in the outdoor projects in this issue, and the screws aren't visible. But still, you *don't* want to use standard zinc or brass-plated woodscrews. These just aren't meant to be outside and can rust quickly.

However, traditional, solid brass woodscrews are a good choice — at least if you're working with a "soft" wood like cedar. (With harder woods, solid brass screws aren't strong enough and tend to snap as you're driving them in.)

Solid brass isn't your only option though. There are screws designed for outdoor use. Stainless steel and silicon bronze are both great for outdoor projects, but they're not as commonly available and can be a bit pricey. A less expensive choice for these projects would be to use a common deck screw.

The nice thing about finding supplies for outdoor furniture is that you usually don't have to look very far. Most home centers carry everything you'll need, though some of the options I've mentioned may be available only at woodworking stores or through mail-order catalogs.

Spiral End Mill Bits

An upcut spiral end mill bit is specifically designed to cut mortises. (It's actually a router bit, but can be used in a drill press that's set at its highest speed.)

Unlike Forstner bits, a spiral end mill bit pulls chips out of the mortise, which eliminates heat build-up and clogging. But the longer cutting edge (and the higher speeds) also makes for a cleaner cut, so the sides of the mortise end up smooth.

Spiral end mill bits are readily available at local woodworking stores or through the mail-order sources listed at right. W

MAIL ORDER SOURCES

Similar project supplies and hardware may be ordered from the following companies:

Highland Hardware
800-241-6748
www.highland hardware.com
End mill bits, Polyurethane glues, Outdoor finishes, Outdoor screws

Jamestown Distributors
800-423-0030
www.jamestown distributors.com
End mill bits, Polyurethane glues, Outdoor finishes, Outdoor screws

Rockler Woodworking
800-279-4441
www.rockler.com
End mill bits, Polyurethane glues, Outdoor screws

Woodcraft
800-225-1153
www.woodcraft.com
End mill bits, Polyurethane glues, Outdoor screws

Woodsmith Store
800-835-5084
End mill bits, Polyurethane glues, Outdoor finishes, Outdoor screws

Woodworker's Supply
800-645-9292
www.woodworker.com
End mill bits, Polyurethane glues, Outdoor finishes, Outdoor screws

WOODSMITH PROJECT SUPPLIES

To order back issues or a hardware kit from *Woodsmith Project Supplies*, please use our Toll-Free order line, see below. It's open Monday through Friday, from 8 AM to 5 PM Central Time. Before calling, please have your VISA, MasterCard, Discover, or American Express card ready.

If you would prefer to mail in an order, please call the Toll-Free phone number below for more information concerning shipping charges as well as any applicable sales tax.

1-800-444-7527

Woodsmith on the web

- "Online Extras" - Plans, Patterns, & More
- Over 100 Woodworking Tips Online
- Visit Our Readers' Project Photo Gallery
- Project Plans You Can Download
- Catalog of Project Kits, Tools, Jigs, & Plans
- Forums for Woodworking, Tools, & Classifieds
- Links to Other Woodworking Sites
- Order *Woodsmith* & *ShopNotes* Back Issues

www.woodsmith.com

Online Customer Service

Click on Subscriber Services at ***www.woodsmith.com***

- Access your account status
- Change your mailing or email address
- Pay your bill
- Renew your subscription
- Tell us if you've missed an issue
- Find out if your payment has been received

FINAL DETAILS

▲ ***Tray Table***. *This easy-to-build weekend project will make a great addition to your deck or patio. Plus, its top doubles as a handy serving tray. Step-by-step instructions begin on page 26.*

▲ ***Wall Storage System***. *Here's a shelving system that won't break your budget or take long to build. And it's designed so the shelves can be easily rearranged. Plans begin on page 30.*

Patio Table & Benches. *Here's a great pair of projects for your deck or patio. And whether you're building the round table or wedge-shaped benches, we've included all the tips and jigs you'll need. The patio table begins on page 6. The benches on page 14.*